AP-3000

AUTOMATED PERIMETER

SERVICE MANUAL
(53-36819.01)

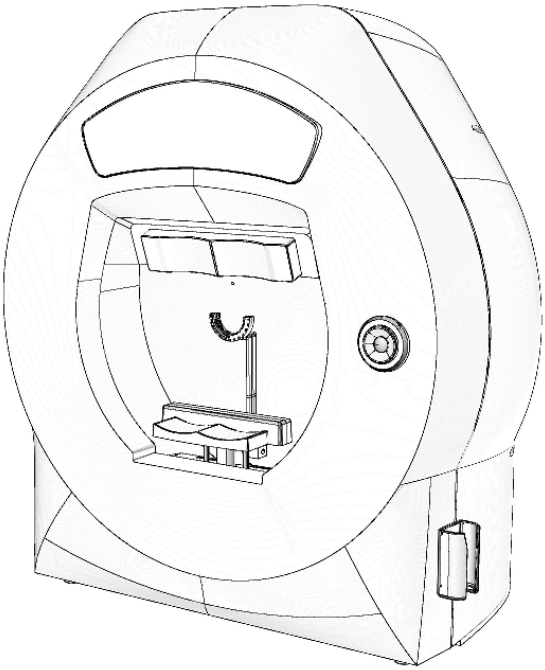

For device with hardware revision 01

CONTENTS

1. INTRODUCTION

This SERVICE MANUAL describes how to check, troubleshoot and repair AP-3000 Automated Perimeter. This manual is intended for service personnel and engineers who will perform maintenance and service procedures. The purpose, overall view and user maintenance of AP-3000 is described in the appropriate OPERATING INSTRUCTION.

If when repairing your AP-3000 you have encountered problems which you cannot solve, or device parameters are changed after the repair, please, in all these cases contact the manufacturer.

WARNING!

The technical servicing of the AP-3000 Automated Perimeter may be carried out by the manufacturer's authorized personnel only!

1.1. Safety precautions

Power connections

- Before connecting the power cord to the mains outlet, check that the local voltage and frequency ratings corresponds with the ratings of the automated perimeter.
- Connect automated perimeter to a three-wire, grounded, receptacle. Do not remove the grounding prong from the power plug.
- Use intact power cord. Replace the cord if it is cracked, frayed, broken or otherwise damaged.
- Do not apply tension to the power cord. The cord may get broken.

External connection

- Do not connect any other external devices to the AP-3000 Automated Perimeter other than those specified by manufacturer.

Fuse replacement

- If needed replace the fuse with a fuse of the same type and with the same rating.

Explosion Hazard

- Do not use the AP-3000 Automated Perimeter in the presence of flammable moistures.

Patient Safety

- Do not perform any testing or maintenance of the AP-3000 Automated Perimeter while it is being used on a patient.

Cleaning and Service

- Only trained personnel with proper tools and test equipment should perform test and repairs described in this manual. Unauthorized service may void the device warranty.
- Switch the power off and unplug power cord before cleaning or service. Get rid of moisture completely before reconnecting to the mains outlet.
- Do not touch any exposed wire or conductive surface while cover is off and the device is energized. The voltages present can cause injury or death.
- Perform electrical safety check and leakage current test after service.
- Do not use ammonia-, phenol- ,or acetone- based cleaners. These cleaners may damage housing surface.
- Do not immerse device in any liquid. Do not allow liquid to enter the device.

- Electrostatic discharge through the PCB may damage the components. Before replacing PCB, wear a static control wrist strap. Handle all PCB by their non conductive edges and use ant-static containers when transporting them.

Installation

- Do not put any objects on top of the device.

Disposal

- Disposal of the device, or parts of it, should be done according to local environmental and waste disposal regulations. Do not dispose to the nature.

The manufacturer accepts no responsibility for any modifications made to the device outside the factory.

2. TECHNICAL DATA

Stimulator Bowl Type	Part hemispherical Radius 300mm. Integrating diffusing surface.		
Visual Field Extent	100˚		
Standard Test Fields	Field name	Number of measurement points	
		green/white	blue/yellow
	Full 50˚	165 points	164 points
	Glaucoma 22˚/50˚	101 points	100 points
	Central 30˚	117points	116 points
	Central 22˚	93 points	92 points
	Wide 22˚/30˚	128 points	127 points
	Peripheral 30˚ to 50˚	72 points	72 points
	Macula 10˚	45 points	44 points
	Driving 50˚/80˚	189 points	188 points
Stimulus Source	Front projection LED		
Stimulus Color	Green 570 nm Blue 435nm White Red 620 nm		
Stimulus Size	Goldman size I to V		
Stimulus Intensity	Green 0.03 asb to 1000 asb in 15 3dB or 45 1dB steps Blue 0.0065 asb to 65 asb in 45 1dB steps		
Exposure Time	Adjustable : 0.1 to 9.9s		
Response Time	Adjustable : 0.1 to 9.9s		
Inter Test Delay	Adjustable : 0.1 to 9.9s		

Background illumination	White, 3.2 cd/m^2, green and red stimulus White, 10 cd/m^2, white stimulus Yellow, 100 cd/m^2, blue stimulus automatic level control	
Fixation control method	Heijl-Krakau – blind spot method and CCD camera	
Fixation Monitor	Central - Green LED, 565nm Wide fixation 30^0 - Red LED, 660nm Fovea fix. ring - Red LED, 700nm	
Test Lens Diameter	38 mm	
Operating Conditions Ambient Temperature Relative Humidity Atmospheric Pressure	 +10˚ to +40˚ C 30 to 85 % 700 to 1060 hPa	
Transport and Storage Ambient Temperature Relative Humidity Atmospheric Pressure	 -10˚ to +40˚ C 30 to 85 % 500 to 1060 hPa	
ISM Classification	I B	
Compliances	CE – mark	
Expected Lifetime	10 Years	
Stimulator Unit	Dimensions W/H/D	 566 x 633 x 396 mm
	Weight	30kg
	Voltage	110-230 VAC 50/60 Hz
	Power consumption	Max 95W
	Fuse Rating	2 x T 800mA
Application Part	Patient Chin Rest	

3. TECHNICAL DESCRIPTION

3.1 Technical description of the AP-3000 automated perimeter

The electrical schematic of the AP-3000 automated perimeter is presented in the Annex A. Diagram of the perimeter is composed of the following main parts:

- power supply
- power junction board
- PC board
- main control board
- projection control board
- front control board

3.1.1 **Power supply.**

115 - 230 VAC via the main power switch is fed to the input of switching power supply SNP-Z107-M. Power supply produces 12V at its output. 12V voltage is connected to the power junction board.

3.1.2 **Power junction board.**

Power junction board redistributes 12V DC to perimeter control boards.

3.1.3 **PC board.**

AP-3000 has embedded PC computer. PC operates under control of Windows XP Embedded operating system. 2.5” SATA HDD is used as system storage. External user ports of PC-board are available on back side of the perimeter. PC communicates with perimeter control boards via USB port.

3.1.4 **Main control board.**

Main control board is responsible for synchronization of operation of all other controller boards of the perimeter. It also converts signal from Camera and controls bowl ventilation fans and fixation LEDs. Main control board communicates with PC via USB port and with remaining control boards via I2C bus.

3.1.5 **Projection control board.**

Projection control board is responsible for generation of the stimulus. It controls stimulus intensity, color (color wheel mounted on stepping motor), size (stimulus target wheel mounted on stepping motor), duration and position (two stepping motors moving projection lens). On all motors there is position detector used for calibrating position at system start. Stimulus detector connected to the projection control boards allows for verification of proper operation of the stimulus generator. Patient response unit is wired to projection control board. The board communicates with remaining perimeter controllers via I2C bus.

3.1.6 **Front control board.**

Front control board is responsible for positioning of the chin and head rest and controlling bowl illumination intensity and color.

3.2 System operation description.

3.2.1 **Power up sequence.**

On power up all control boards begin operations independently. Boards do not communicate during this stage.

- Projection control board starts from calibration of motor positions, then projects white color stimulus into central position for period of approximately 1 sec.
- Main control board initializes peripherals like CMOS sensor and USB subsystem and waits for PC computer.
- Front control board calibrates position of chin rest motors and sets background illumination level to given value.
- PC board starts under control of Windows Embedded operating system. Perimeter application is launched automatically after system startup.

3.2.2 **Application startup.**

On perimeter application startup following system tests are executed:

- Verification of operation of perimeter communication bus.
- Verification of patient response unit connection.
- Verification of projection system position.
- Verification of stimulus intensity levels

After above steps are completed system is ready for operation.

4. TROUBLESHOOTING.

Possible failures together with failure cause and suggested corrective action are listed in the Table below.

No	Symptom	Cause	CORRECTIVE ACTION
1.	Perimeter fails to operate, no display, mechanical stages do not perform calibration, no backlight illumination.	Faulty power supply. Blown fuses	Disconnect all power output cables from power supply unit, check voltage on power supply output,12V. Change power supply unit. Check fuses on power inlet module.
2.	Perimeter fails to operate, no display, mechanical stages calibrate, backlight illumination works properly.	Faulty PC board	Check voltage at PC board power in connector. Replace PC board.
3.	Perimeter starts, but stops in BIOS with or without error message.	BIOS settings have been reset. Faulty battery on PC board.	Set up BIOS configuration and restart. Check battery voltage, replace battery if required.
4.	Bowl illumination is missing.	Faulty front housing control board	Check power (12V) at front control board power connector. Verify connection between front control board and illumination modules. Replace front control board.
5.	Bowl illumination is constant regardless of test type.	Faulty front housing control board Faulty illumination sensor	Verify connection between illumination sensor and frond control board. Replace front control board. Replace illumination sensor.

6.	Stimulus error (incorrect size, shape, color)	Faulty stimulus wheel position sensor. Faulty stimulus wheel motor driver Mechanical problem with stimulus generation module.	Verify position sensor, replace if faulty. Replace projection control board. Replace projection module.
7.	Stimulus out of focus	Faulty limit sensor on focus axis Faulty focus axis motor driver Mechanical problem	Replace sensor Replace projection control board. Replace projection module.

5. PERIMETER DISASSEMBLING.

5.1. General description - rear bottom view.

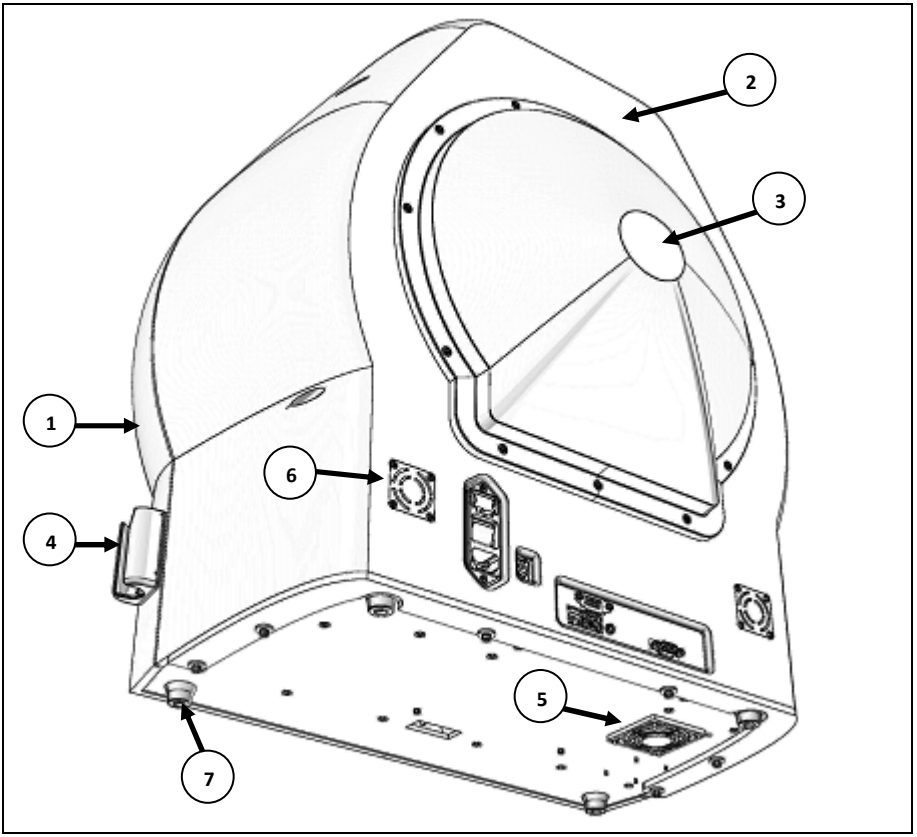

Picture 1 - Perimeter rear view.

No.	Part name	Quantity	Part number
1	Front housing	1	53-03110.01
2	Rear housing	1	53-03113.01
3	Rear housing cover	1	53-03222.01
4	Patient switch holder	1	53-03251.01
5	PC fan cover	1	08-00370
6	Stimulator bowl fan cover	2	08-00360
7	Feet	4	53-77590.01

5.2. Rear housing removal.

1. Disconnect all cables from the unit. Place perimeter face down on soft stable surface. Remove six screws located at the perimeter base.

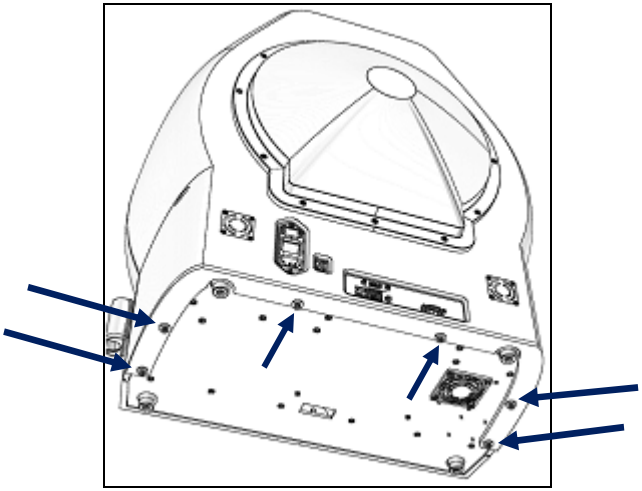

Picture 2 - Bottom screws removal.

2. Remove five Allen Hex screws and pull up entire rear housing.

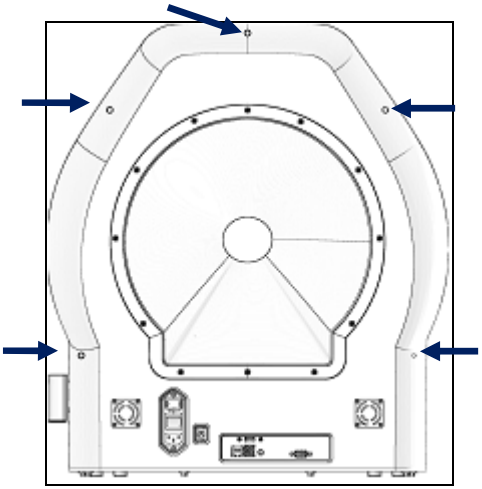

Picture 3 - Rear housing removal.

5.3. Front housing removal.

1. Front housing is hold by five screws. Three screws are located at the bottom part of the housing and two in the top part. **Start with the screw that is accessible only via hole in bottom plate of the perimeter (use short head Allen hex key PN: 53-99124.01)**

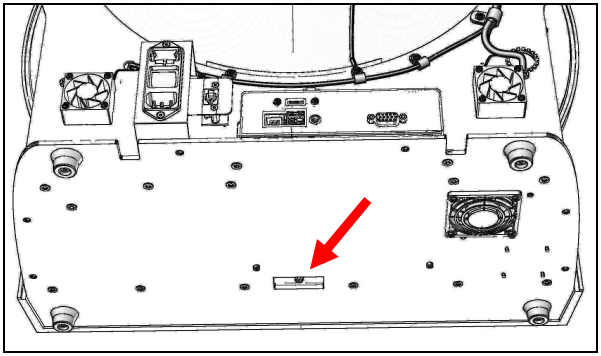

Picture 4 - Front housing removal.

2. Rotate perimeter to its normal position and remove four remaining screws. While removing screw hold back front housing - released housing may fall.

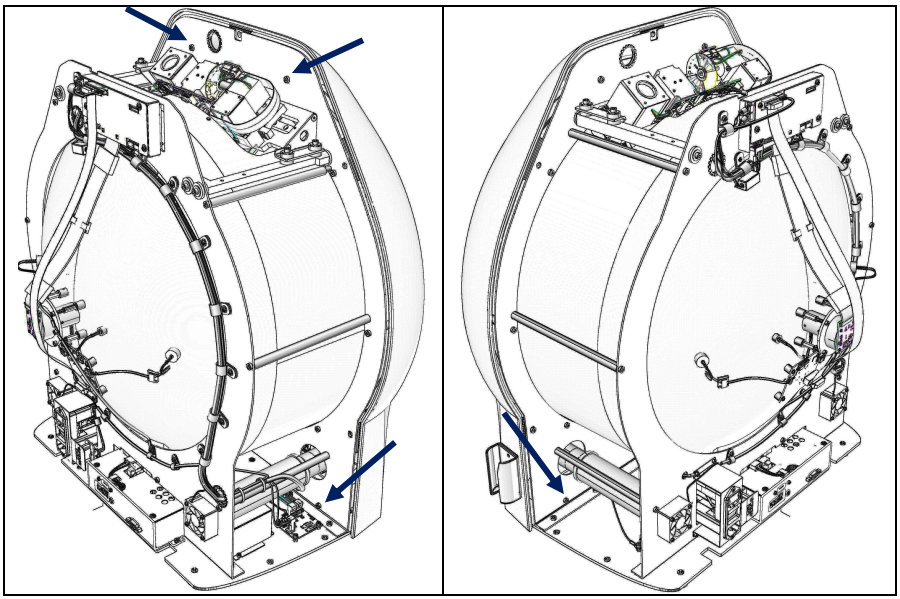

Picture 5 - Front housing removal.

3. Tilt front housing.

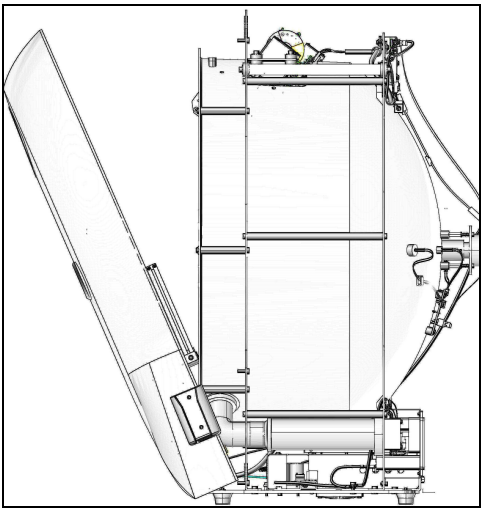

Picture 6 - Front housing removal.

4. Disconnect power and communication cable from front control board connectors. Power cable connector is equipped with latch. Press latch to release wire.

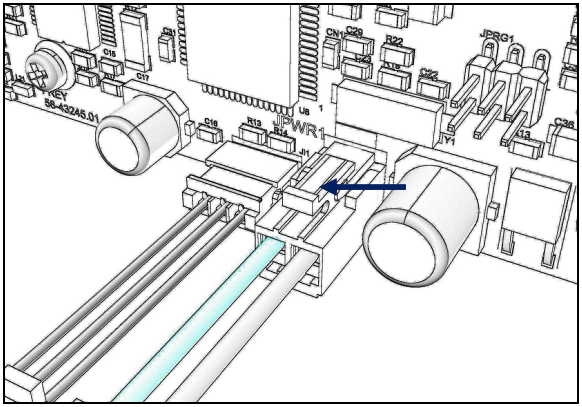

Picture 7 - Front housing connectors.

5. Remove front housing.

5.4. Front housing details.

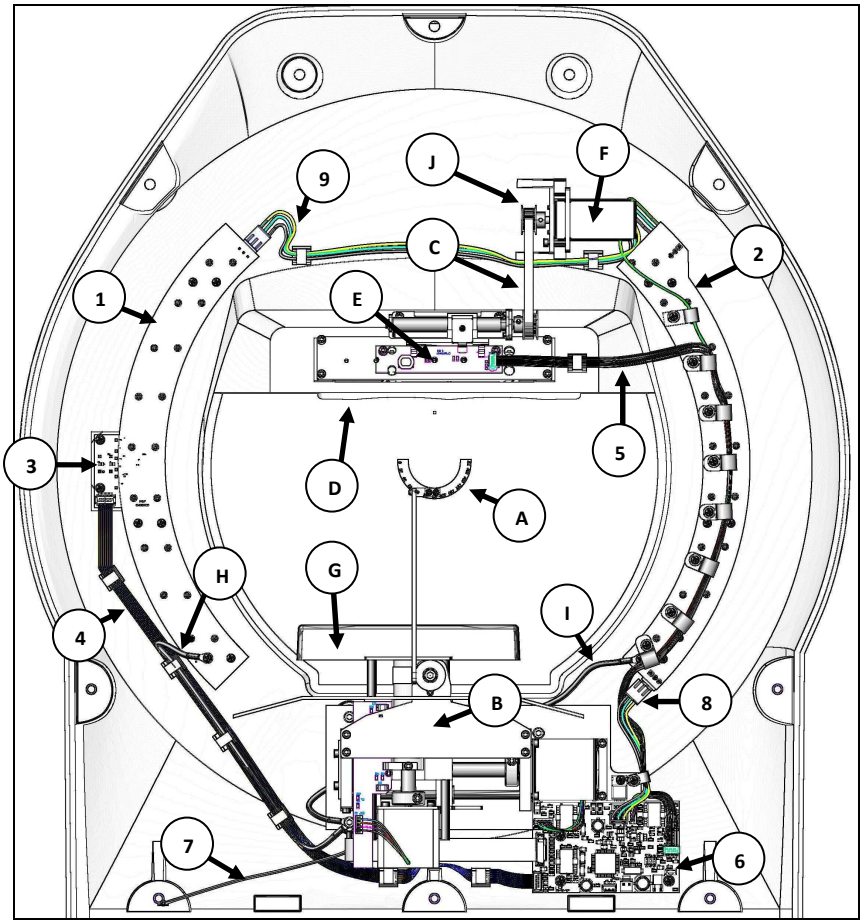

Picture 8 - Front housing inside view.

No.	Part name	Quantity	Part number
1	LED board - left	1	53-07820.00
2	LED board - right	1	53-07820.00
3	Navi keyboard	1	53-43820.01
4	Navi key ribbon cable	1	53-66012.01
5	Forehead board ribbon cable	1	53-66014.01

No.	Part name	Quantity	Part number
6	Front housing control board	1	53-43245.01
7	Chin rest grounding cable	1	53-66024.01
8	LED board power cable - short	1	53-66018.01
9	LED board power cable - long	1	53-66016.01
A	Lens holder module*	1	53-57332.01
B	Chin rest module**	1	53-03293.01
C	Timing flat belt	1	02-52870
D	Forehead support	1	53-03238.01
E	Forehead rest module ***	1	53-52874.01
F	Forehead motor module ****	1	53-52876.01
G	Chin rest	1	53-03235.01
H	LED board grounding cable - left	1	53-66025.01
I	LED board grounding cable - right	1	53-66029.01
J	Pulley	1	53-52868.01

* - detailed description on page 23
** - detailed description on page 18
*** - detailed description on page 16
**** - detailed description on page 17

5.5. Forehead rest module.

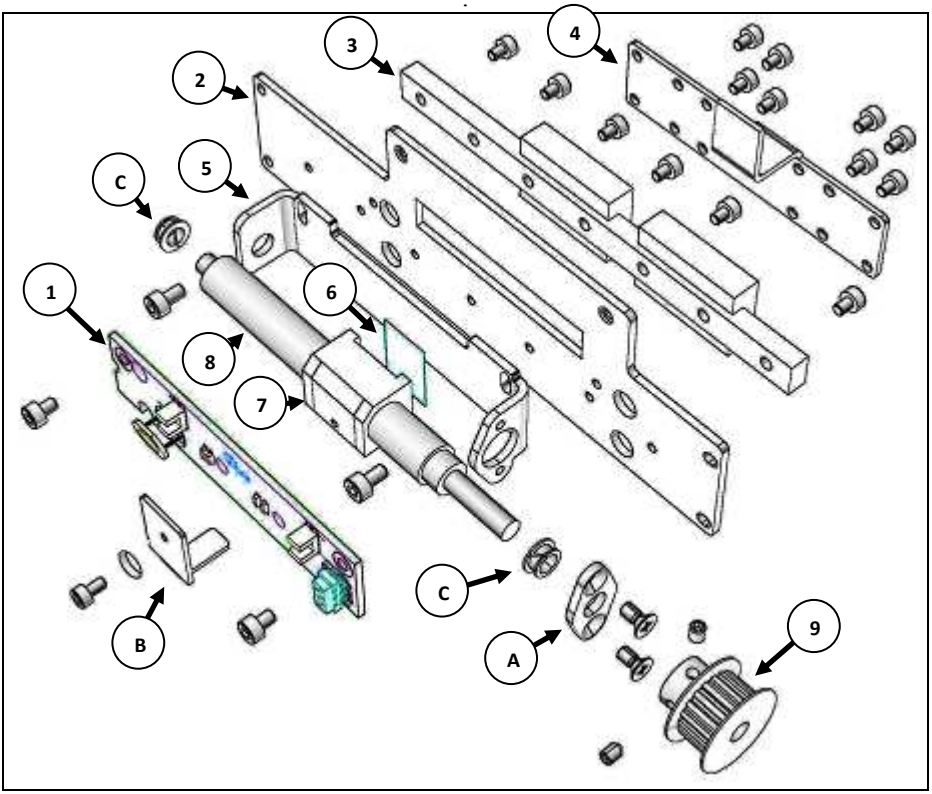

Picture 9 - Forehead rest module 53-52874.01.

No.	Part name	Quantity	Part number
1	Forehead support board	1	53-03526.00
2	Support plate	1	53-52852.01
3	Linear guide	1	02-20035
4	Linear guide support	1	53-52846.01
5	Roll holder	1	53-52850.01
6	Bumper	1	06-46018
7	Nut	1	53-52858.01
8	Threaded roll	1	53-52856.01
9	Pulley	1	53-52868.01

No.	Part name	Quantity	Part number
A	Roll stabilizer	1	53-52854.01
B	Home pin	1	53-52848.01
C	Bearing	2	02-52866

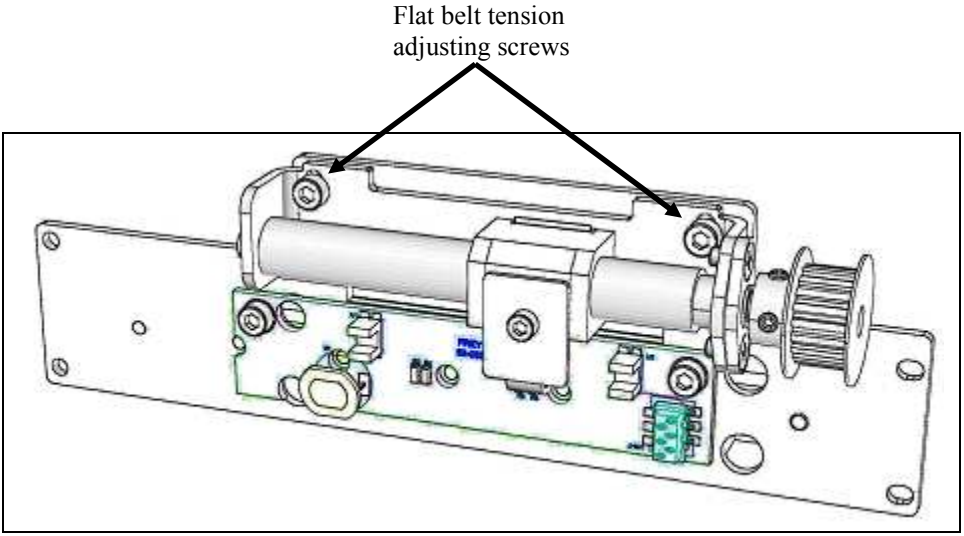

Picture 10 - Forehead rest module.

5.5.1. Forehead motor module.

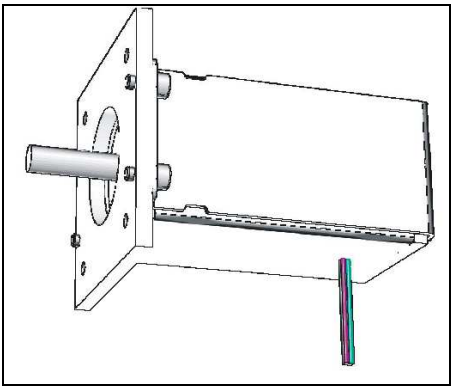

Picture 11 - Forehead rest motor module 53-52876.01.

5.6. Chin rest module.

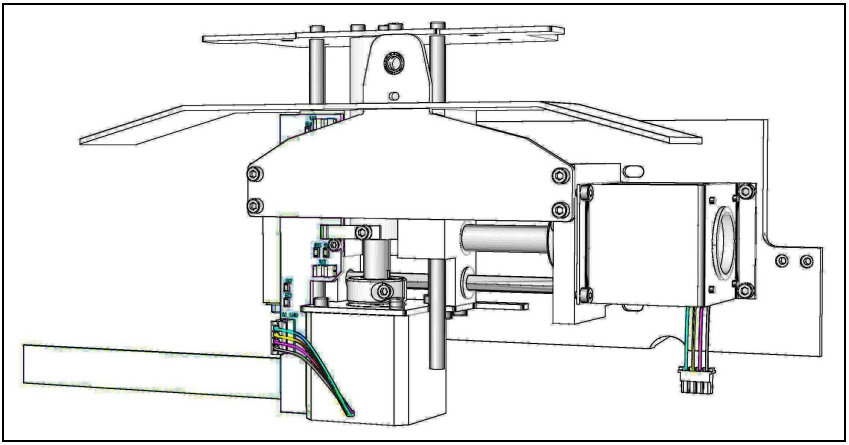

Picture 12 - Chin rest module - 53-03293.01.

WARNING!

When removing/replacing lens holder module perform lens holder position check/adjustment- see chapter 6.13.

5.6.1. Chin rest module disassembling - step 1.

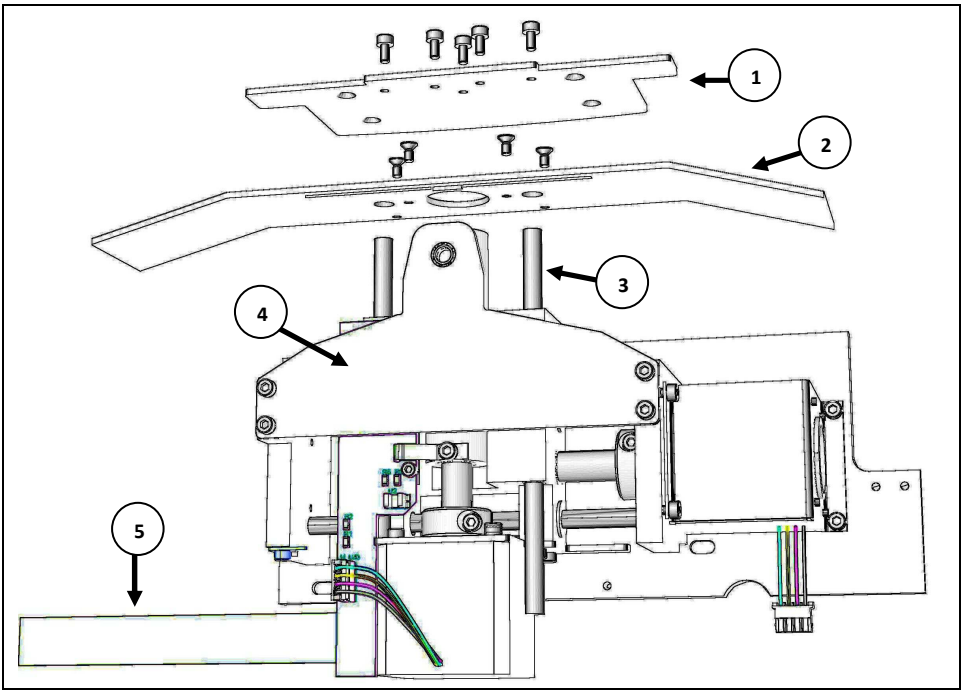

Picture 13 - Chin rest module disassembling.

No.	Part name	Quantity	Part number
1	Chin rest plate	1	53-52668.01
2	Cover	1	53-03243.01
3	Slide shaft	2	53-52664.01
4	Lens module holder	1	53-52674.01
5	Flex cable	1	06-41120

5.6.2. Chin rest module disassembling - step 2.

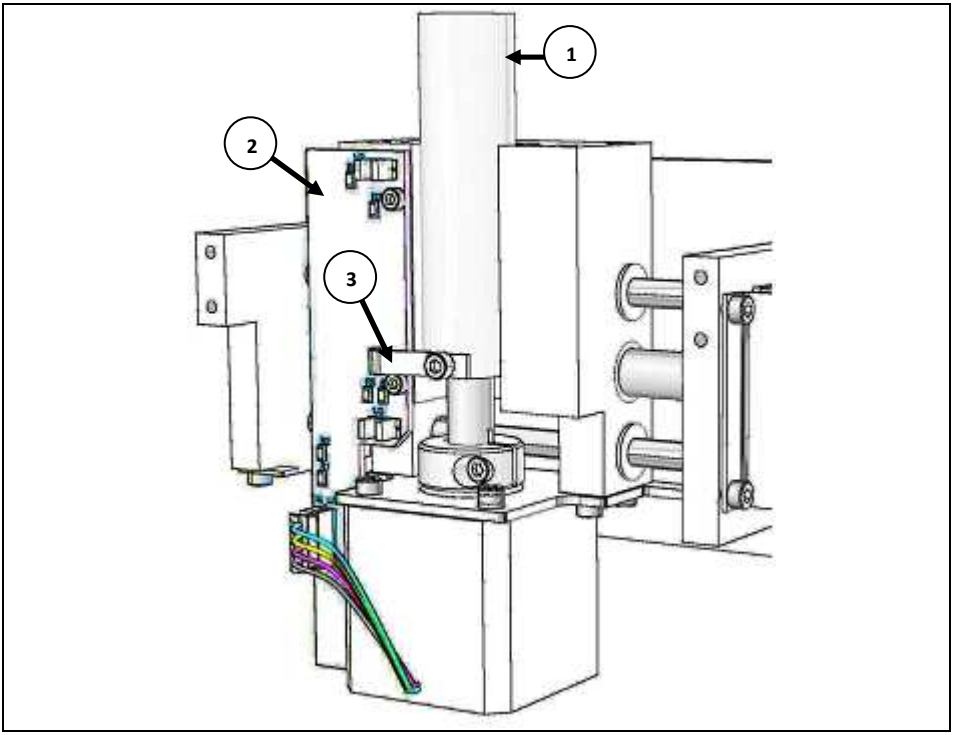

Picture 14 - Chin rest module disassembling.

No.	Part name	Quantity	Part number
1	Bush	1	53-52666.01
2	Chin rest board	1	53-02871.00
3	Homing pin	1	53-52672.01

5.6.3. Chin rest module disassembling - step 3.

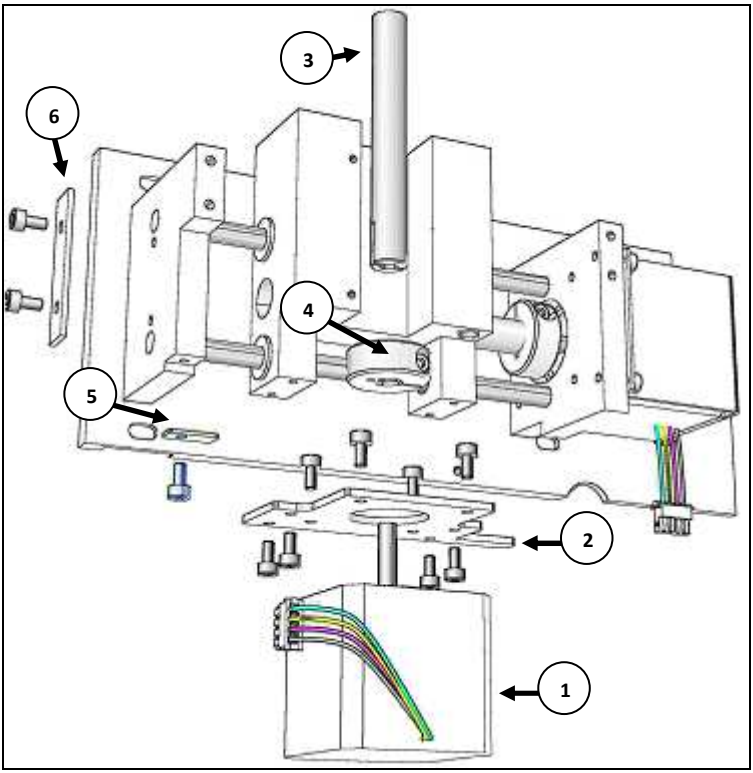

Picture 15 - Chin rest module disassembling.

No.	Part name	Quantity	Part number
1	Motor	1	53-52687.01
2	Motor mounting plate	1	53-52662.01
3	Treaded shaft	1	53-52656.01
4	Clamp	1	02-52676
5	Homing pin	1	53-52673.01
6	Support plate	1	53-52654.01

5.6.4. Chin rest module disassembling - step 4.

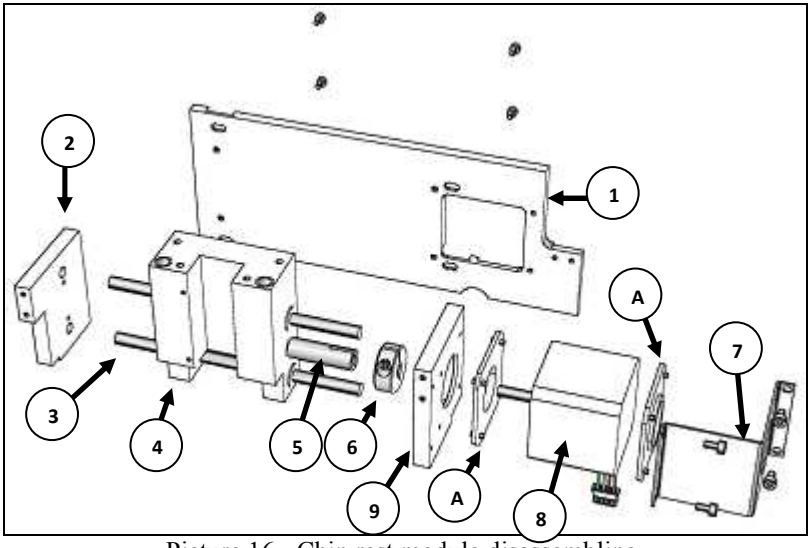

Picture 16 - Chin rest module disassembling.

No.	Part name	Quantity	Part number
1	Base plate	1	53-52646.01
2	Left support	1	53-52648.01
3	Slide shaft	2	53-52652.01
4	Body	1	53-52661.01
5	Treaded shaft	1	53-52656.01
6	Clamp	1	02-52676
7	Motor clamp	1	53-52686.01
8	Motor	1	53-52844.01
9	Right support	1	53-52650.01
A	Rubber washer	2	05-43916.01

5.7. Lens holder module.

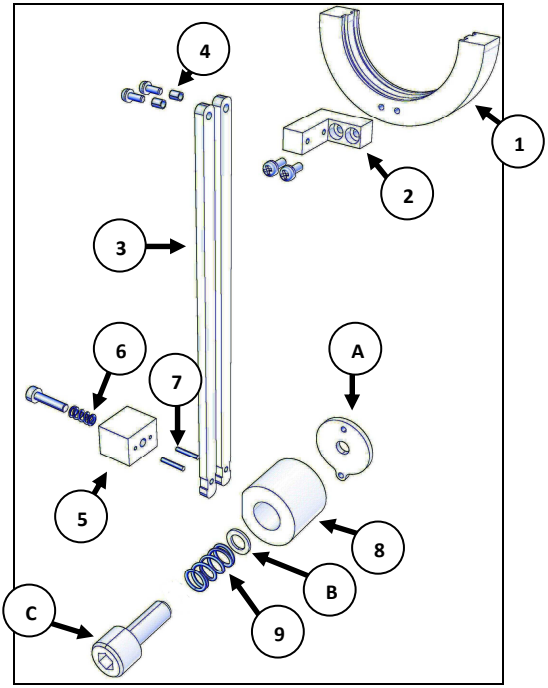

Picture 17 - Lens holder module PN: 53-57332.01

No.	Part name	Quantity	Part number
1	Lens holder	1	53-57320.01
2	L-arm	1	53-57326.01
3	Arm	2	53-57324.01
4	Spacer	2	38-17061.01
5	Cube	1	53-57330.01
6	Spring	1	02-30033
7	Pin	2	38-17056.01
8	Rotating holder	1	53-57322.01
9	Spring	1	02-30136.01
A	Adjusting ring	1	53-57328.01
B	Washer	1	38-17059

WARNING! **Always apply thread locking solution to thread end of screw 'C' before reinstalling lens holder module.**

5.8. Projection module removal.

WARNING!

When projection module is removed or replaced or module holding screws are loosened or removed (see picture 21) calibration of the module geometry is needed - please check CALIBRATION AND ADJUSTMENT FLOW TABLE in Annex D!

1. Remove projection module cover. Cover is held by six screws.

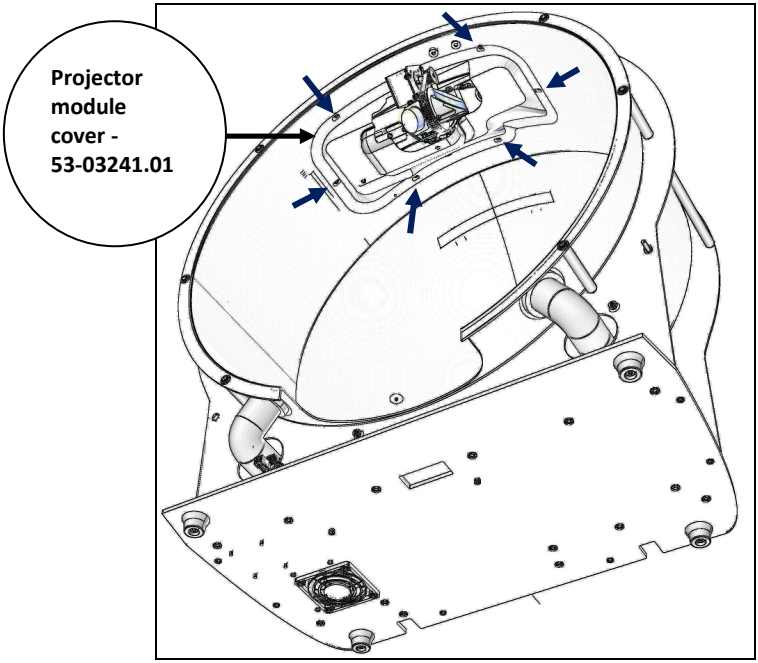

Picture 18 - Projection module cover removal.

2. Disconnect all wires form main control board. Remove main control board EMC shield and then remove main control board.

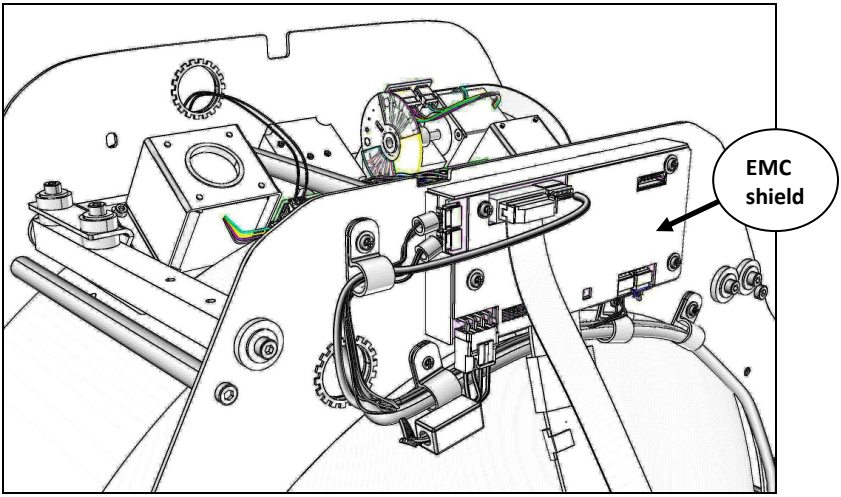

Picture 19 - Removal of EMC screen and main control board.

3. Unscrew two Allen hex screws (see green arrows) and remove spacer.

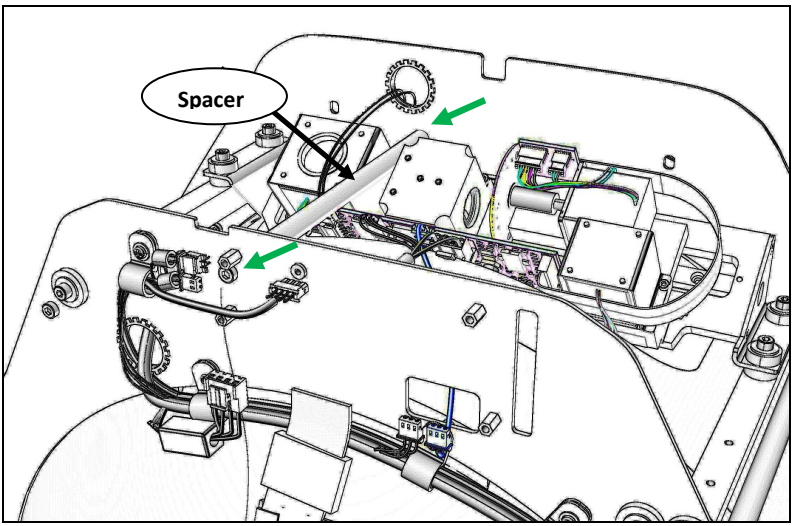

Picture 20 - Spacer disassembling.

4. Disconnect Power cable, Patient response button cable, Light sensor cable and RS485 communication cable from projection module control board.

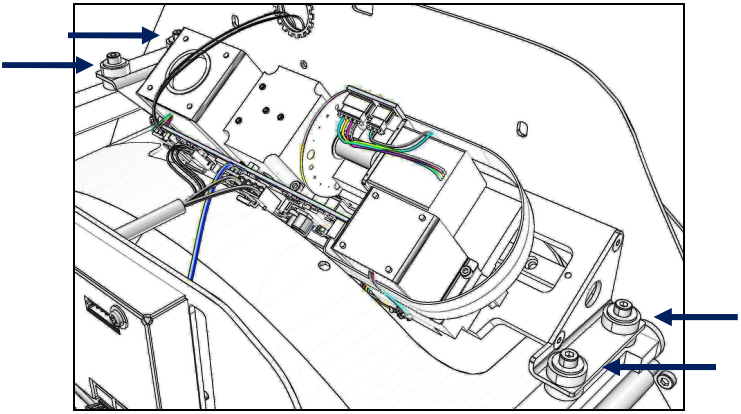

Picture 21 - Projection module holding screws removal.

5. Remove four Allen hex screws (marked with arrows) and gently lift up projection module.

WARNING! **When reinstalling projection module, remember to use projection module spacer PN: 53-99118.01.**

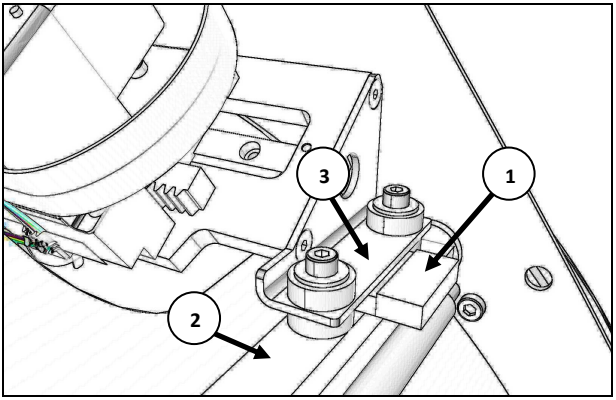

Picture 22 - Projection module spacer.

Insert spacer ‘1’ between projection module support ‘2’, and projection module holder ‘3’. Tighten two Allen hex screws and remove spacer. Repeat this procedure for other end of the projection module.

5.9. Projection module details.

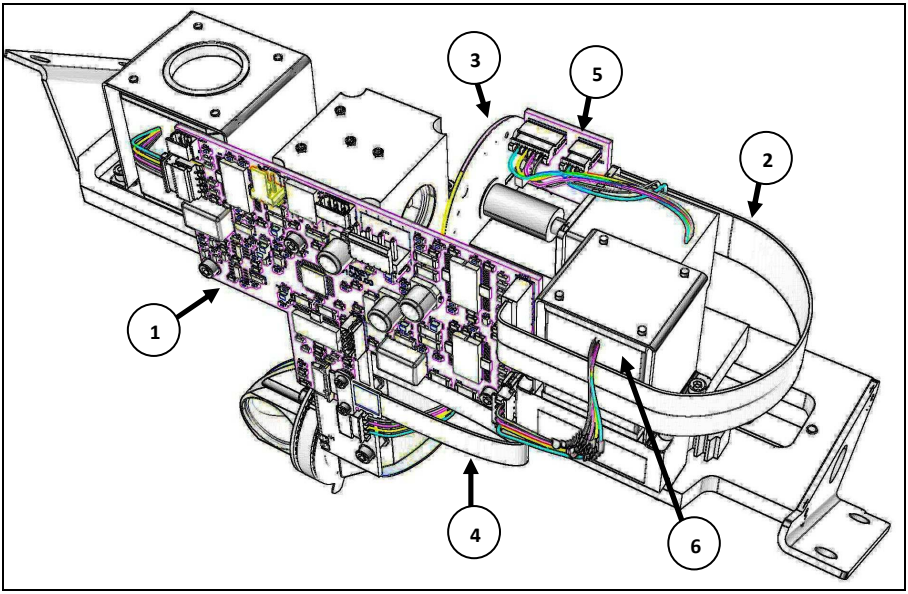

Picture 23 - Projector module 53-52895.01 top-rear view.

No.	Part name	Quantity	Part number
1	Projection module control board	1	53-01003.00
2	Flex cable	1	06-41120.00
3	Stimulus disk*	1	53-71481.01
4	Flex cable	1	06-41090.01
5	LED connector board	1	53-07197.00
6	Stimulus focus motor module**	1	53-71546.01

* detailed description on page 31
** detailed description on page 30

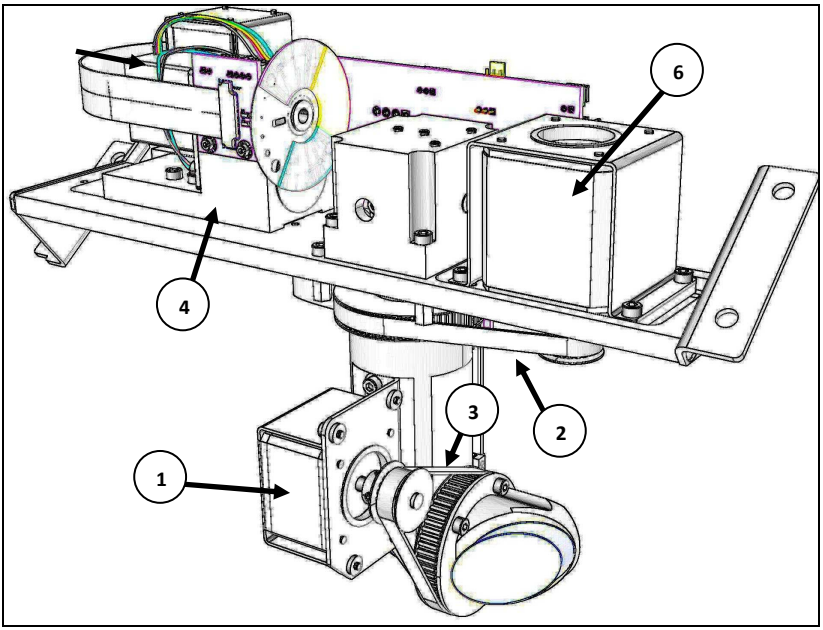

Picture 24 - Projector module front view.

No.	Part name	Quantity	Part number
1	Stimulus motor module UP/DOWN*	1	53-52714.01
2	Flat timing belt	1	02-71512
3	Flat timing belt	1	02-52870
4	LED lens module **	1	53-71540.01
5	Stimulus motor with projection LED module ***	1	53-71542.01
6	Stimulus motor module LEFT/RIGHT ****	1	53-71544.01

* detailed description on page 32
** detailed description on page 32
** * detailed description on page 33
** ** detailed description on page 32

5.9.1. Stimulus motor module UP/DOWN

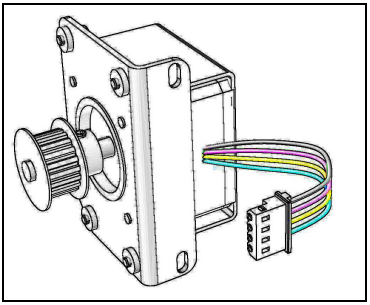

Picture 25- Stimulus motor module Up/Down 53-52714.01

5.9.2. LED lens module

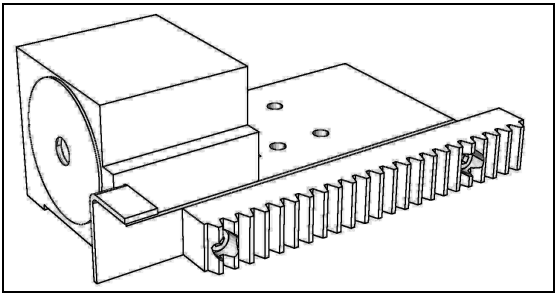

Picture 26 - LED lens module 53-71540.01

5.9.3. Stimulus motor module LEFT/RIGHT module

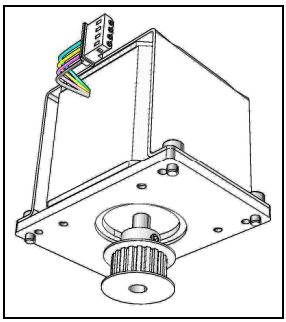

Picture 27 - Stimulus motor Left/Right module 53-71544.01

5.9.4. Stimulus focus motor module

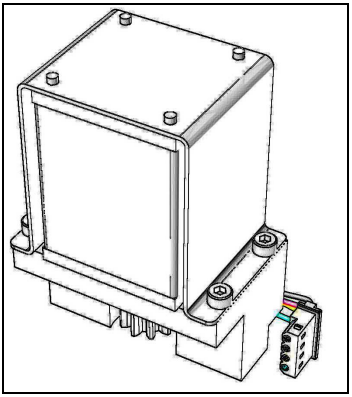

Picture 28 - Stimulus focus motor module 53-71546.01

5.9.5. Stimulus motor with projection LED module

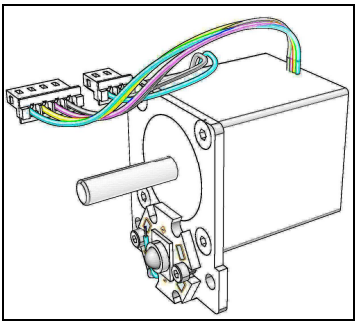

Picture 29 - Stimulus motor with LED module 53-71542.01

WARNING! **Do not remove projection LED from projection LED module.**

5.9.6. Stimulus disk replacement.

When replacing stimulus disk use spacer '1' PN: 53-99116.01 to assure proper distance between disk and home sensor.

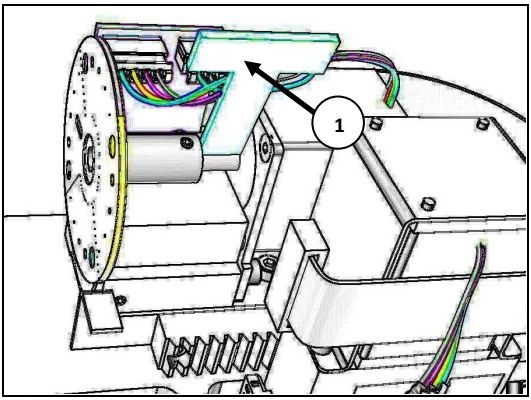

Picture 30 – Stimulus disk replacement.

Use threads locking solution on stimulus disk locking screw.

WARNING! **Please check Annex D for calibration details.**

5.10. Internal light sensor replacement.

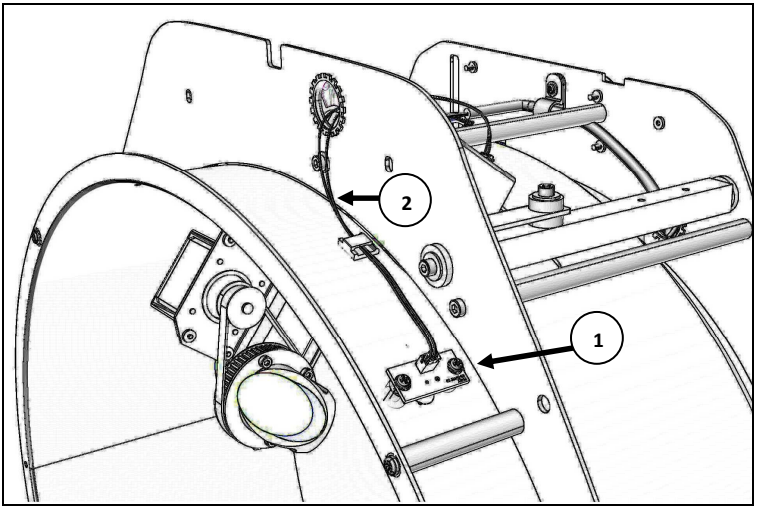

Picture 31 - Internal Light sensor.

No.	Part name	Quantity	Part number
1	Internal light sensor	1	53-52854.01
2	Light sensor cable	1	53-52848.01

WARNING! **Please check Annex D for calibration details.**

5.11. Perimeter inside rear view.

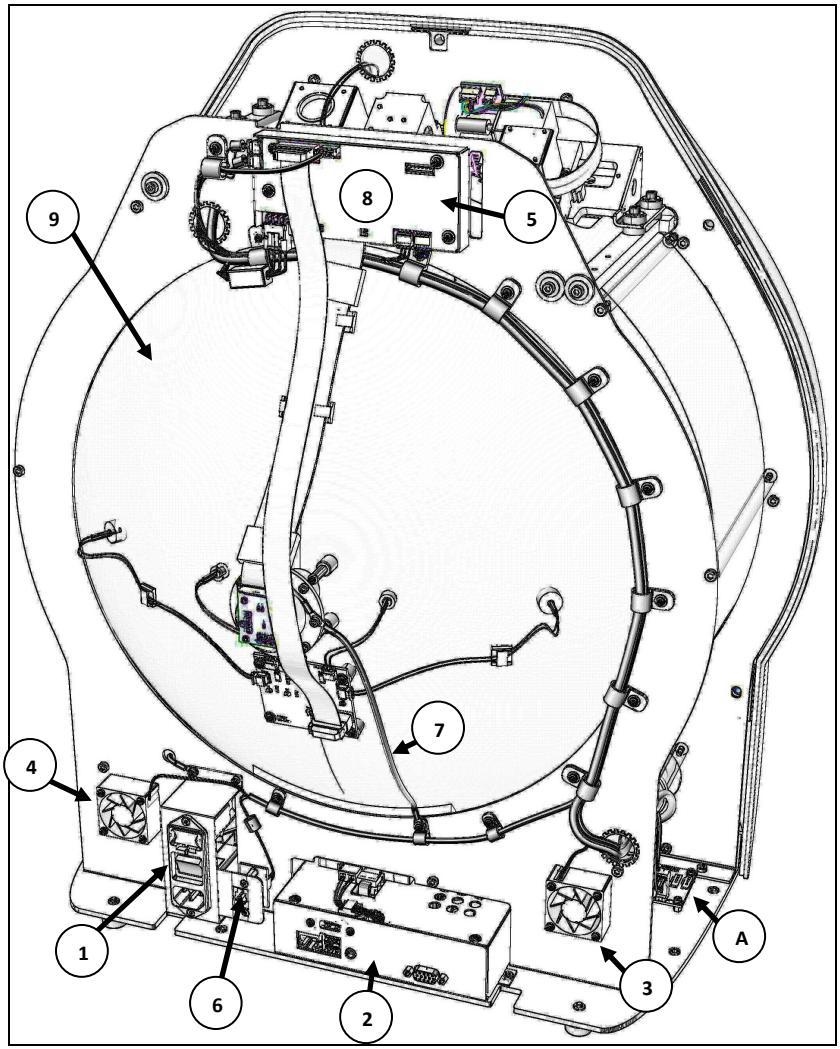

Picture 32 - Projector module front view.

No.	Part name	Quantity	Part number
1	Power inlet module	1	06-29020
2	Central electronic module with HDD	1	53-43822.01
3	Stimulator bowl fan - RIGHT	1	53-43802.01
4	Stimulator bowl fan - LEFT	1	53-43800.01
5	EMC shield	1	53-52374.01
6	Patient switch connector board	1	53-05187.00
7	Camera grounding cable	1	53-66027.01
8	Main control board - **not shown** or Main control board - **not shown**	1	53-04009.01 53-04009.02
9	Stimulator bowl	1	53-03225.01
A	Power junction board	1	53-02577.01

5.12. PC fan removal.

1. Remove two screws marked with red arrow and loose one screw marked with green arrow.

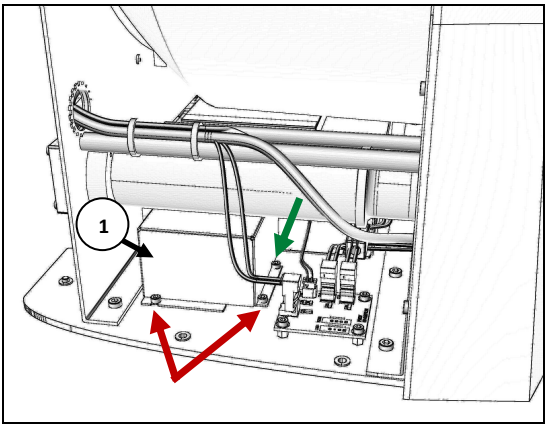

Picture 33 – PC fan cover removal.

2. Remove PC fan housing – '1' (PN: 53-71465.01).

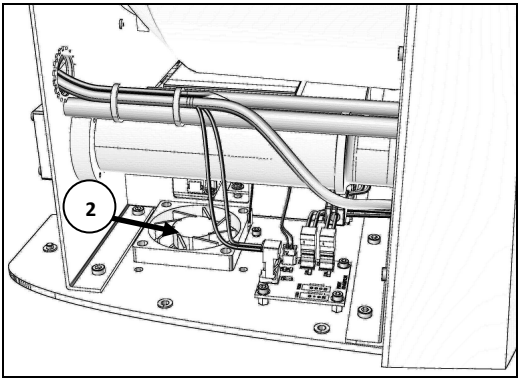

Picture 34 – PC fan replacement.

3. Disconnect PC fan – '2' (PN: 53-43804.01) from power junction board. And unscrew four fan screws. Screws are accessible from bottom side of the perimeter.

WARNING! **To assure proper ventilation when reassembling make sure that fan housing is close to central electronics module (no hole/space between).**

5.13. Central electronics module removal.

1. Disconnect 12V power cable from power junction board - see red arrow.

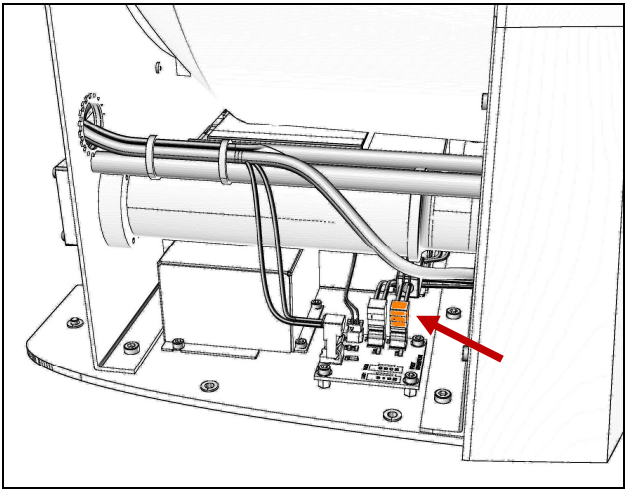

Picture 35 - Removing power cable.

2. Remove four screws (see red arrows). Two screws are located at the back of bottom plate. Start with the bottom screws.

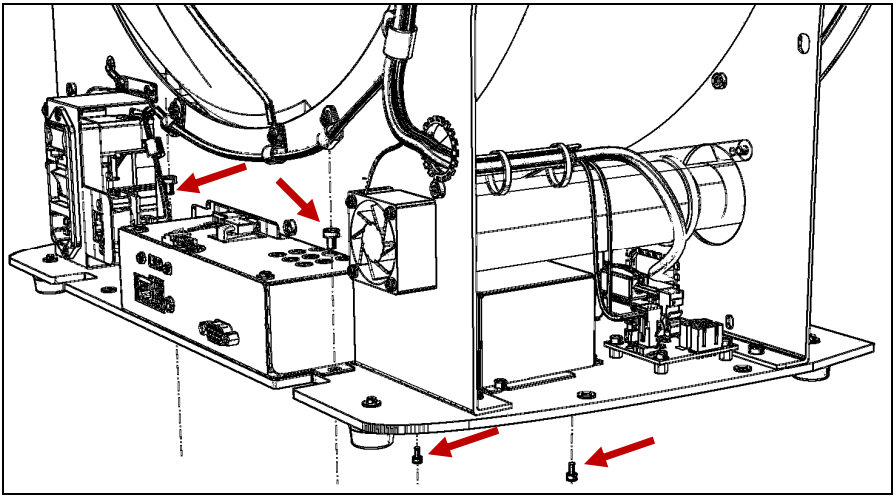

Picture 36 - Central electronics module removal.

3. Remove grounding screw and release central electronics module grounding cable.

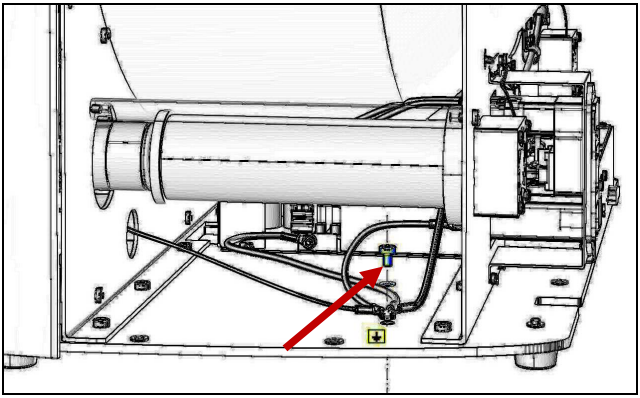

Picture 37 - Grounding cable removal.

4. Pull out central electronics module and disconnect internal USB cable (red arrow).

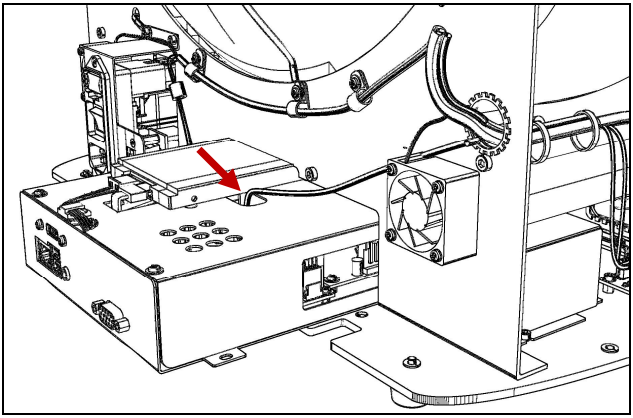

Picture 38 - USB internal cable removal.

WARNING! **See picture 40 for details how to reconnect properly USB cable.**

5. Remove central electronics module and disconnect power cable from power supply – see picture 39.

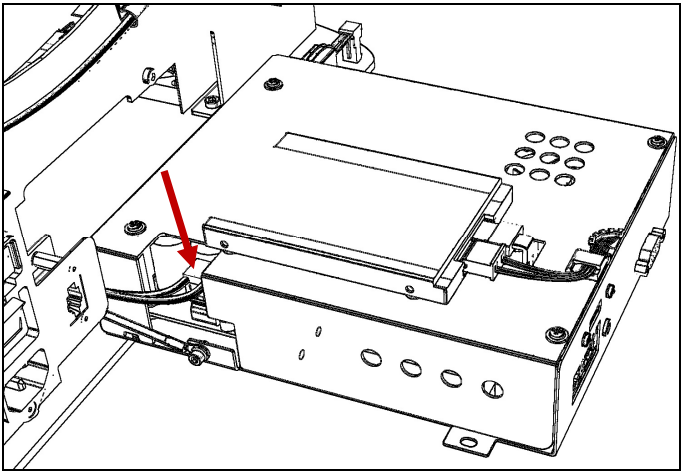

Picture 39 – VCC cable removal.

6. Remove central electronics module and disconnect power cable from power supply – see picture 39.

7. Remove central electronics module.

WARNING!

To assure proper ventilation of central electronics module when reassembling make sure that PC fan housing is close to central electronics module (no hole/space between).

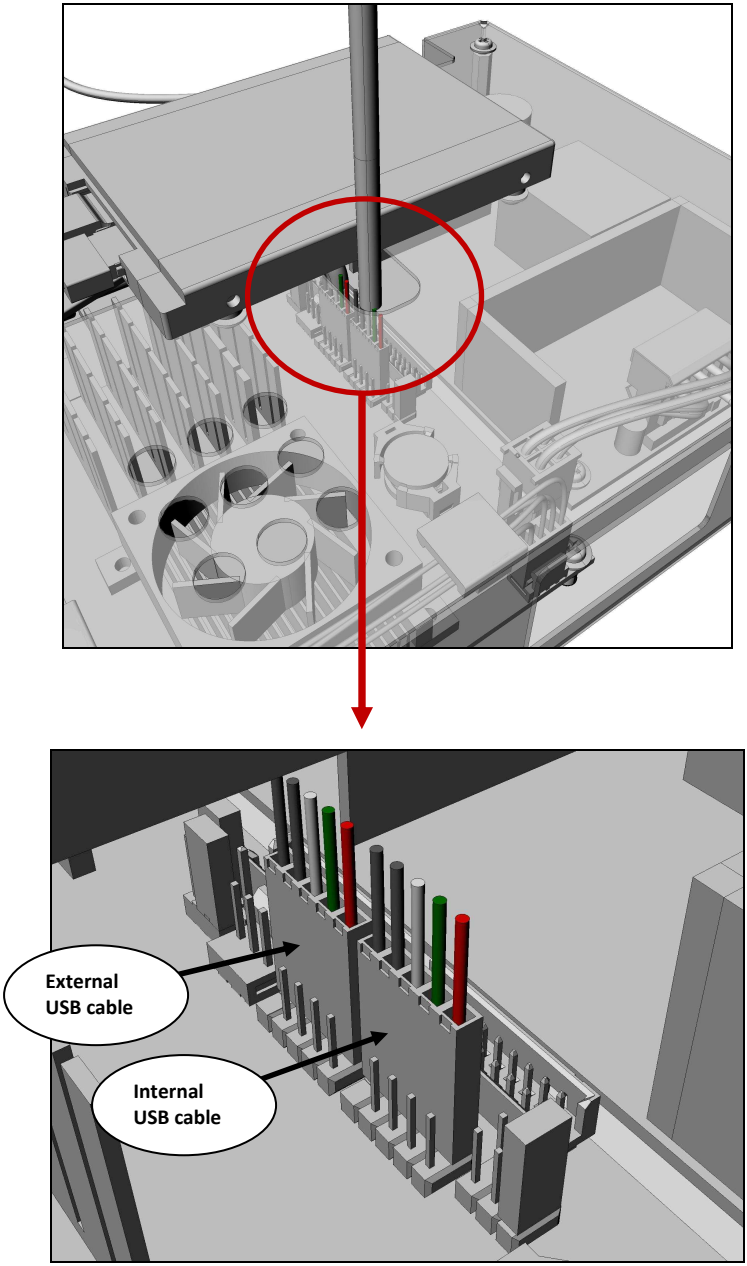

Picture 40 - Central electronics module PC board USB connector.

5.14. Central electronics module disassembling.

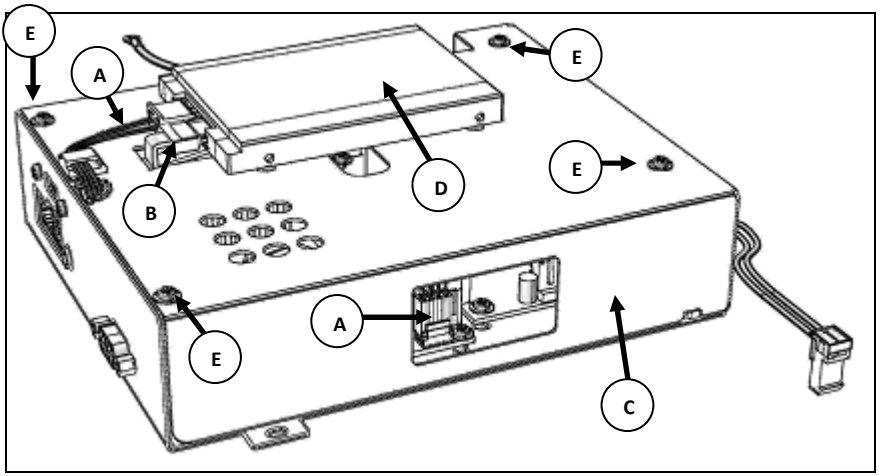

Picture 41 - Central electronics module 53-43822.01

1. Disconnect HDD power cable connector ‘A’ from PC board.
2. Disconnect SATA cable from hard drive. ‘B’.
3. Remove four screws and lift up EMC shield ‘C’.

No.	Part name	Quantity	Part number
A	HDD power cable	1	53-66046.01
B	SATA cable	1	06-49047
C	EMC shield	1	53-71467.01
D	HDD with software (TOMEY)	1	53-43828.01

5.14.1. Central electronics details.

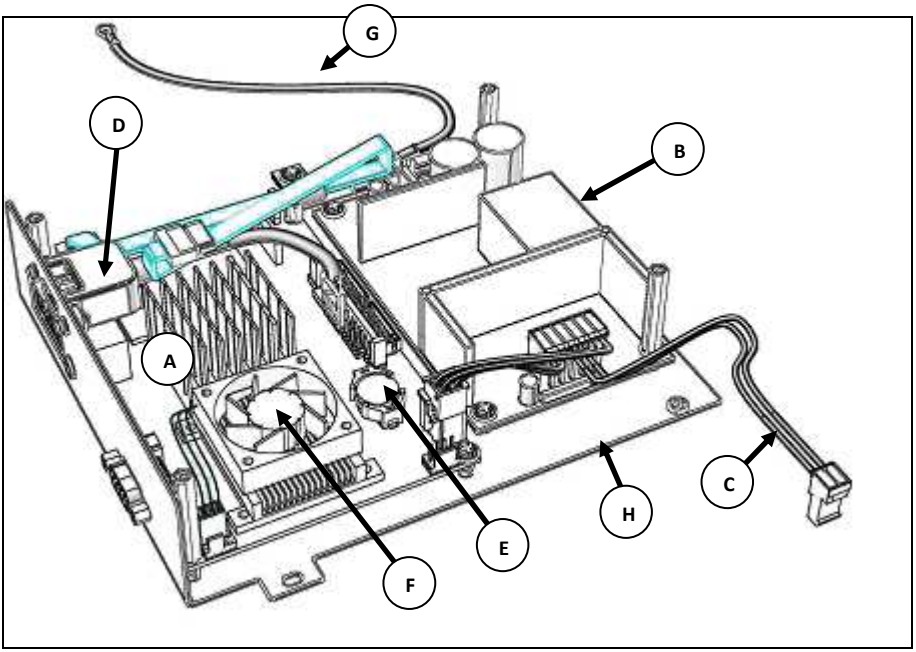

Picture 42 - Central electronics module details.

No.	Part name	Quantity	Part number
A	PC board	1	08-00271
B	Power supply	1	06-50010
C	Power cable	1	53-66040.01
D	External USB cable	1	53-66176.01
E	CMOS Battery	1	06-35001
F	CPU fan	1	08-00020
G	PC base plate grounding cable	1	53-66028.01
H	PC module base plate	1	53-71464.01
I	Memory module* (not visible)	1	53-09576.00

* Memory module is located at the bottom of PC board.

5.15. Stimulator bowl rear view.

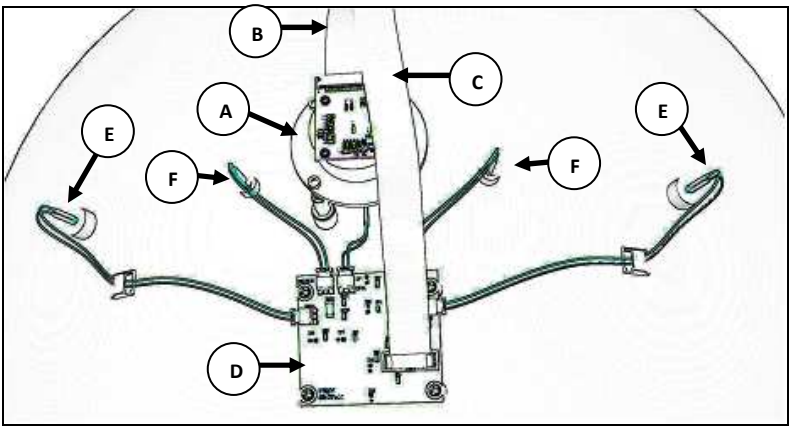

Picture 43 - Stimulator bowl rear view.

No.	Part name	Quantity	Part number
A	CCD camera module*	1	53-72469.01
B	CCD camera flex cable	1	53-66195.01
C	FOVEA ribbon cable	1	53-66177.01
D	FOVEA board	1	53-07531.00
E	Wide fixation LED	2	53-43808.01
F	IR LED	2	53-43806.01

* detailed description on page 44

5.16. CCD camera module details.

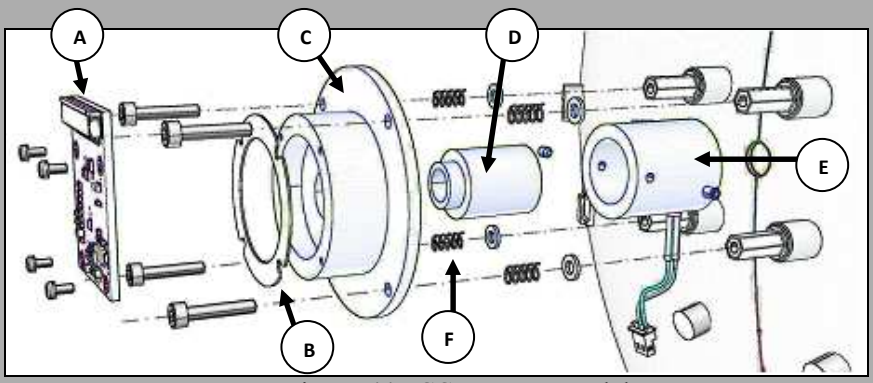

Picture 44 - CCD camera module.

No.	Part name	Quantity	Part number
A	CCD camera board	1	53-02551.02
B	Spacer	1	53-71441.01
C	Camera ring	1	53-71435.01
D	Camera lens	1	53-71439.01
E	Central fixation target	1	53-71442.01
F	Spring	4	02-30333

6. CALIBRATION AND ADJUSTMENTS.

6.1. Service menu.

To enter service menu run perimeter application and select '***Menu' >> 'Advanced Service'***, enter service password –'***16434***'.

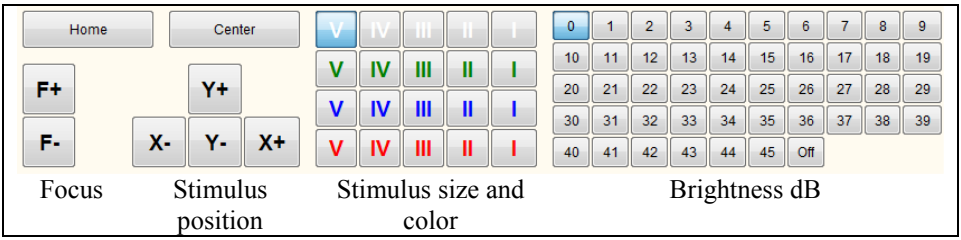

Picture 45 – Service menu common buttons.

'***Home***'- Execute home procedure for all projection module motors.

'**Center**'- Moves stimulus to the center of stimulator bowl.

'***Brightness dB***'- Stimulus intensity buttons.

'***Stimulus position***'- Moves stimulus. Use RIGHT mouse button for fine adjustment. You can also move stimulus with cursor buttons + CTRL for final adjust.

'***Focus***'- Stimulus focus adjustment. Use RIGHT mouse button for fine adjustment. You can also change focus with PgUp and PgDn buttons + CTRL for final adjust.

'***Stimulus size and color***'- Stimulus color and size selection buttons.

WARNING! **Use Left mouse button for inaccurate and Right mouse button for fine adjust.**

6.2. Device check tab.

This tab allows direct control of various functions of automated perimeter.

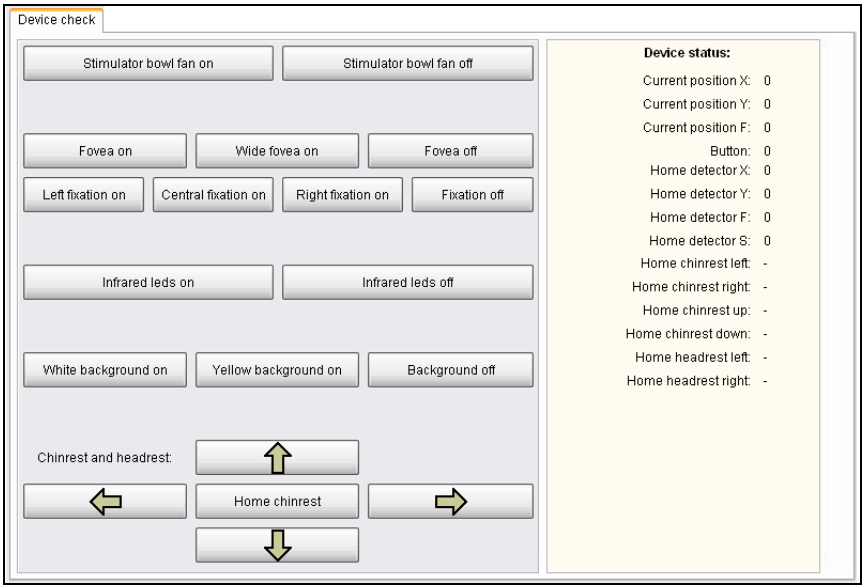

Picture 46 – Device check tab.

‘***Current position X***’ – Current stimulus distance from stimulator bowl central point in micro steps (X-axis)**.**

‘***Current position Y***’ – Current stimulus distance from stimulator bowl central point in micro steps (YT-axis)**.**

‘***Current position F***’ – Current stimulus focus motor distance from stimulator bowl central point focus in micro steps**.**

‘***Button***’ – Patient response button state**.**

‘***Home detector X***’ – Stimulus home detector state – X axis**.**

‘***Home detector Y***’ - Stimulus home detector state – Y axis**.**

‘***Home detector F***’ – Stimulus focus home detector state.

‘***Home detector S***’ – Stimulus disk home detector state.

‘***Home chinrest left***’ – State of the left chinrest home detector.

‘***Home chinrest right***’ – State of the right chinrest home detector.

‘***Home chinrest up***’ – State of the uper chinrest home detector.

‘***Home chinrest down***’ – State of the bottom chinrest home detector.

‘***Home headrest left***’ – State of the left forehead support home detector.

‘***Home headrest right***’ – State of the right forehead support home detector.

6.3. Stimulus disk home position calibration.

1. Remove rear housing.
2. Turn on the perimeter.
3. Run perimeter application. Select '***Menu' >> 'Advanced Service'***, enter service password –'***16434***'.
4. Select '***Stimulus disk home position'*** tab.

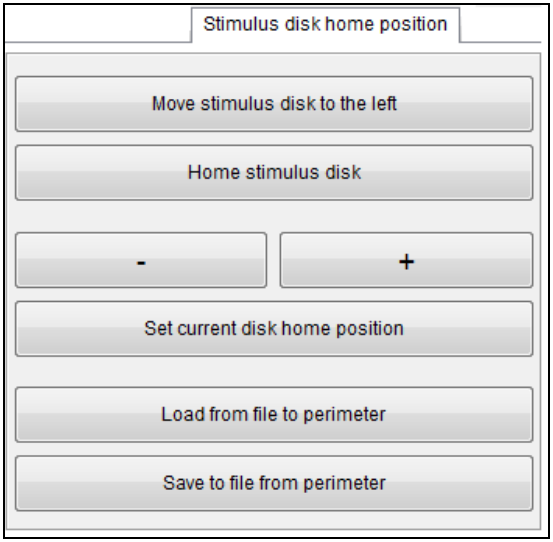

Picture 47 – Stimulus disk home position tab.

5. Press '***Move stimulus disk to the left***'. Stimulus disk will move to position where removal of stimulus disk will be possible.

WARNING! **Make sure that you do not short-circuit projection module control board with stimulus disk.**

6. Remove projection module stimulus disk.
7. Set stimulus brightness to 6 dB (use service menu common buttons).
8. Place stimulus disk home calibration pattern – '1' PN: 53-99132.01 inside the stimulator bowl – see picture 48. Assure stable position of calibration pattern.
9. With stimulus position buttons move stimulus to the center of calibration pattern.
10. Adjust stimulus focus with focus buttons.

11. Check again and adjust if needed position of the stimulus **or** calibration pattern. Make sure that stimulus is very precisely positioned in the center of positioning ring.

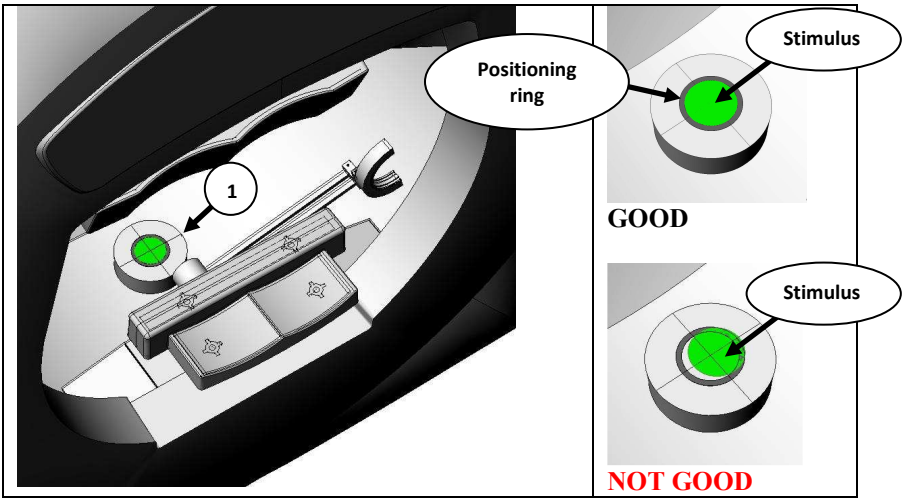

Picture 48 – Calibration setup.

12. Press '***Move stimulus disk to the left***'. Stimulus disk will go to position where installation of the disk will be possible.
13. Install stimulus disk (use disk spacer '1' PN: 53-99116.01 – see chapter 5.9.6 for details).
14. Press '***Home stimulus disk***'. GREEN stimulus size I will appear.
15. Adjust focus of the stimulus with focus buttons.
16. Use '+' and '-' buttons to move stimulus to cross center - see picture 49. Use right mouse button for fine adjust.
17. Press '***Set current disk home position***' to store calibration data to perimeter memory.
18. Press '***Home stimulus disk***'.
19. With stimulus size and color buttons go through all stimulus types and check proper stimulus position. Stimulus of each size should fit in center ring.

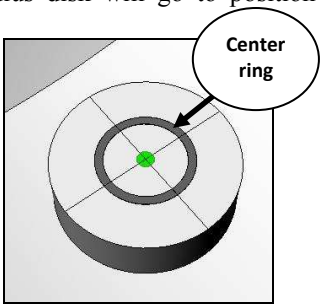

Picture 49 – Stimulus size I.

NOTE! **Remember to save calibration data to a file. Please e-mail calibration file to TOMEY. We will store this file in our internal database for future repair purposes.**

6.4. Stimulator bowl geometry calibration.

6.4.1. Stimulator bowl central point calibration check.

1. Turn on perimeter.
2. Run perimeter application. Select '***Menu'*** >> ***'Advanced Service'***, enter service password –'***16434***'.
3. Select **WHITE** stimulus size **V** and **3dB** brightness form service menu common buttons.
4. Select '***Center'*** button form service menu common buttons to move stimulus to camera opening.
5. Check stimulus position and focus – see picture 50.

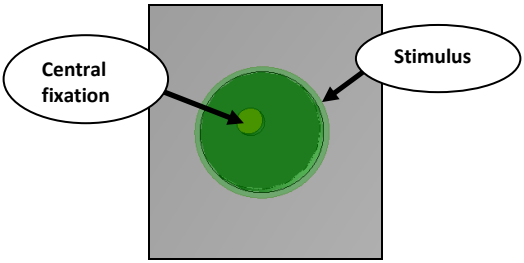

Picture 50 – Central point position check.

NOTE! **Center position of the stimulus should be set within max. 1.5mm tolerance in each direction. Calibrate central point if needed.**

6.4.2. Stimulator bowl central point calibration.

1. Turn on perimeter.

2. Run perimeter application. Select '***Menu' >> 'Advanced Service'***, enter service password –'***16434***'.

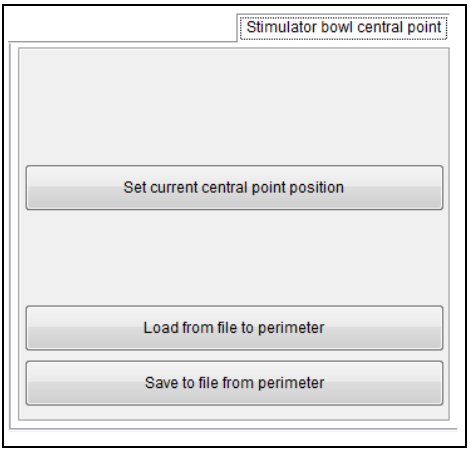

Picture 51 – Stimulus disk home position tab

3. Select '***Stimulus bowl central point'*** tab.

4. Select **WHITE** stimulus size **V** and **3dB** brightness form service menu common buttons.

5. Move stimulus with stimulus position buttons to the center of stimulator bowl, near camera opening – picture 52a).

6. Adjust stimulus focus and move stimulus to camera opening – picture 52 b).

7. Press '***Set current central point position***'.

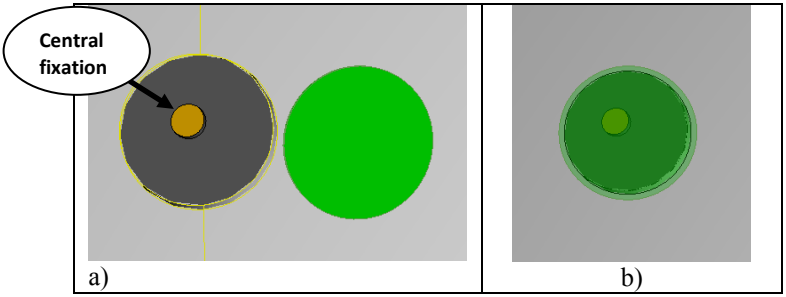

Picture 52 – Stimulus disk home position tab.

Remember to save calibration data to a file. Please e-mail calibration file to TOMEY. We will store this file in our internal database for future repair purposes.

6.4.3. Stimulator bowl geometry calibration check.

1. Turn on perimeter.

2. Run perimeter application. Select '***Menu' >> 'Advanced Service'***, enter service password –'***16434***'.

3. Select '***Stimulator bowl geometry'*** tab**.**

4. Calibration check is based on position of three points. Fixation left and right LED and fovea bottom LED. See picture 54.

5. Press '***Left fixation***' button to move stimulus to the left fixation LED. Check if stimulus position is correct. Perform same test for '***Right fixation***' LED and '**Bottom fovea**' LED. Stimulus should be presented in proper position with accuracy ± 1mm.

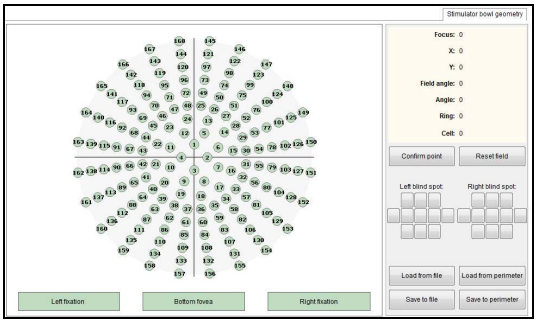

Picture 53 – Geometry calibration tab.

6. Recalibrate stimulator bowl geometry if needed.

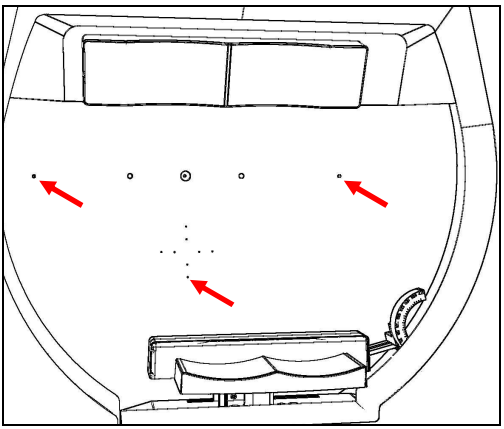
Picture 54 – Geometry check calibration points

6.4.4. Stimulator bowl geometry calibration.

1. Remove front housing

2. Place stimulator bowl calibration pattern '1' inside stimulator bowl. Please make sure that pattern is placed in proper position.

WARNING! **There are two holes in calibration pattern. Those holes should match with Left and Right fixation LEDs holes - see red arrows. Calibration central hole should be located in center of camera opening.**

3. To stabilize calibrations pattern attach it with sticky tape to the stimulator bowl.

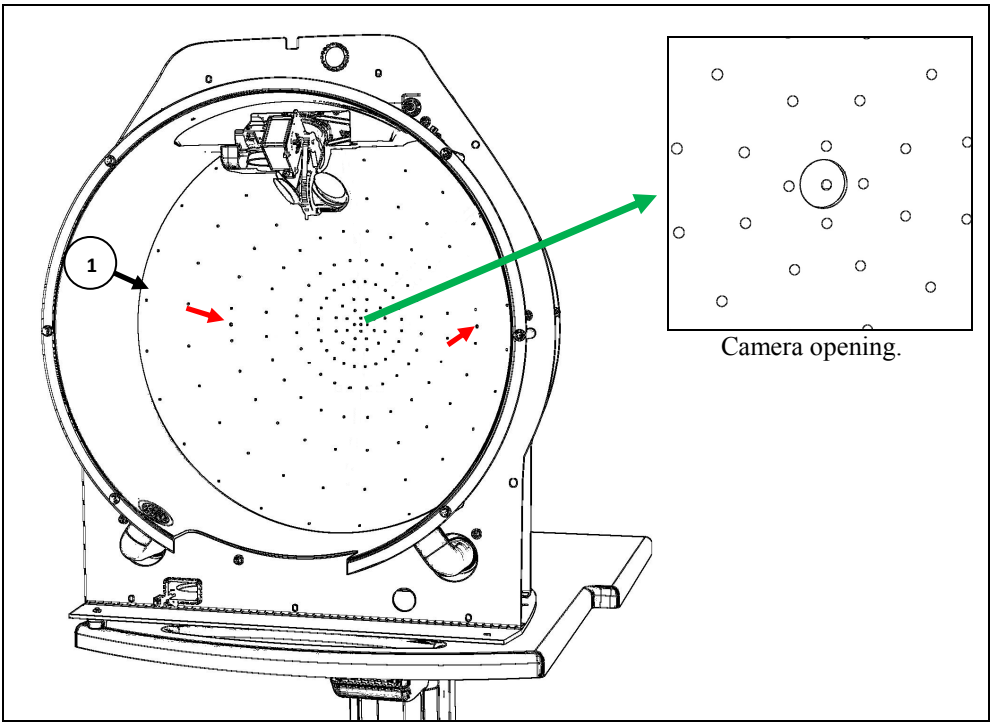

Picture 55 - Stimulator bowl geometry pattern.

4. Run perimeter application. Select '***Menu' >> 'Advanced Service'***, enter service password –'***16434***'.

5. Select '***Stimulator bowl geometry'*** tab. Current geometry calibration data will be automatically loaded from the perimeter memory.

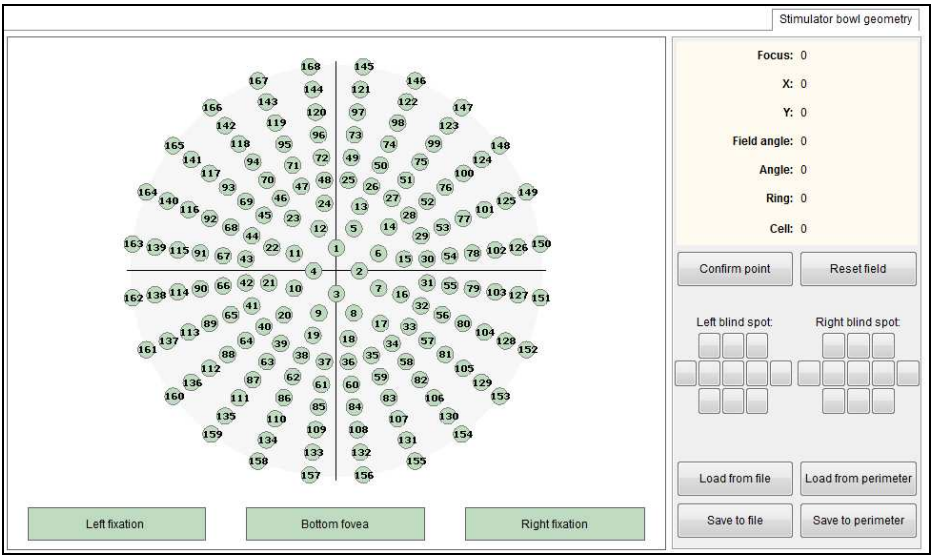

Picture 56 – Geometry calibration tab.

6. Select **<u>GREEN</u>** stimulus size **IV** and **<u>1dB</u>** brightness form service menu common buttons.

7. Press '***Reset fields***'. All calibration points will change color from green (calibrated) to orange (not calibrated).

8. Each calibration point is marked with individual number. To start calibration press dot number one. Perimeter will display stimulus in position stored in device memory. Adjust stimulus position and focus in the stimulator bowl. Use stimulus position and focus buttons. Position of the stimulus must be adjusted precisely. Stimulus focus can be set roughly but to the level that will allow precise position calibration. Precise focus adjustment will be set in the next stage of calibration.

9. When the point is well calibrated, press '***Confirm cell***'. Orange dot will change its color to green – point calibrated. Move to next calibration point and repeat this procedure until all points are calibrated.

10. Calibrate position and focus for '***Left fixation***', '***Right fixation***', and '***Bottom fovea***' – see picture 54.

When all points are calibrated, store calibration data in perimeter memory and go to section 6.1.1 for final focus adjustment.

WARNING! **'*Confirm cell*' button do not store calibration data to perimeter memory.**

Calibration data can be at any time stored or read from the perimeter or a file, '***Store to perimeter***', '***Save to a file***', '***Load from a file'***, '***Read from perimeter'***.

WARNING! **Each time calibration data is read from a file or device memory all calibration points will change color to green.**

6.4.5. Stimulus focus final adjustment.

1. Select **GREEN** stimulus size **V** and **1dB** brightness from service menu common buttons.

2. Repeat step 7 to 9 from chapter 6.4.4. This time adjust only stimulus focus. Do not change position of the stimulus unless it is needed.

When all points are calibrated, store calibration data in perimeter memory.

NOTE! **Remember to store calibration data in perimeter memory and save it to a file. Please e-mail calibration file to TOMEY. We will store this file in our internal database for future repair purposes.**

6.5. Stimulus intensity check.

WARNING! **You will need dark room or low intensity light room to perform stimulus intensity check.**

WARNING! **Attach front cover before you start this procedure.**

WARNING! **If the room is not dark enough error messages will appear.**

1. Perform steps 1 to 14 from chapter 6.6.
2. Press '***Check calibration***'. Calibration process for each color is fully automatic.
3. Change color tab to switch to another color calibration check.

Points with proper value are displayed with black color (graph and digits). Points with invalid intensity levels are marked with red color.
Values are displayed with following order: Normative stimulus luminosity,[cd/m^2], dB value, DAC value (perimeter calibration data memory), DAC value currently measured, DAC difference, Percentage difference (DAC values).

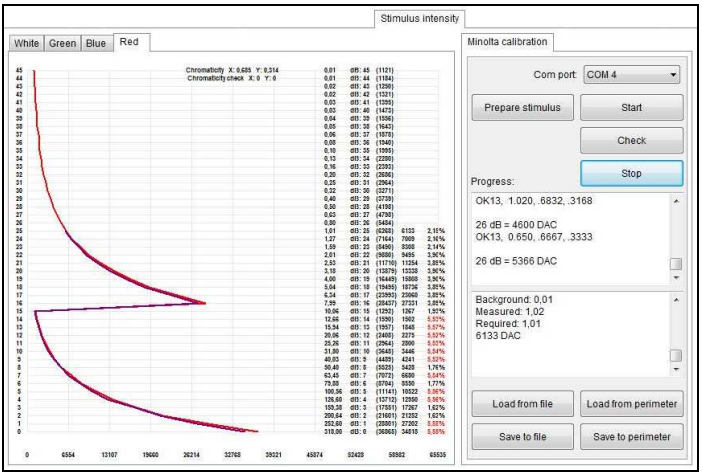

Picture 57 – Stimulus light intensity tab.

Recalibrate stimulus intensity according to chapter 6.6 if needed.

6.6. Stimulus intensity calibration.

WARNING! **You will need dark room or low intensity light room to perform stimulus intensity calibration.**

WARNING! **Attach Perimeter front housing before you start calibration.**

WARNING! **If the room is not dark enough error messages will appear.**

1. Remove digital output terminal cover and connect rs-232 communication cable to Minolta output connector.

2. Connect rs-232 communication cable via rs-232 to USB converter to one of the USB port of AP-3000.

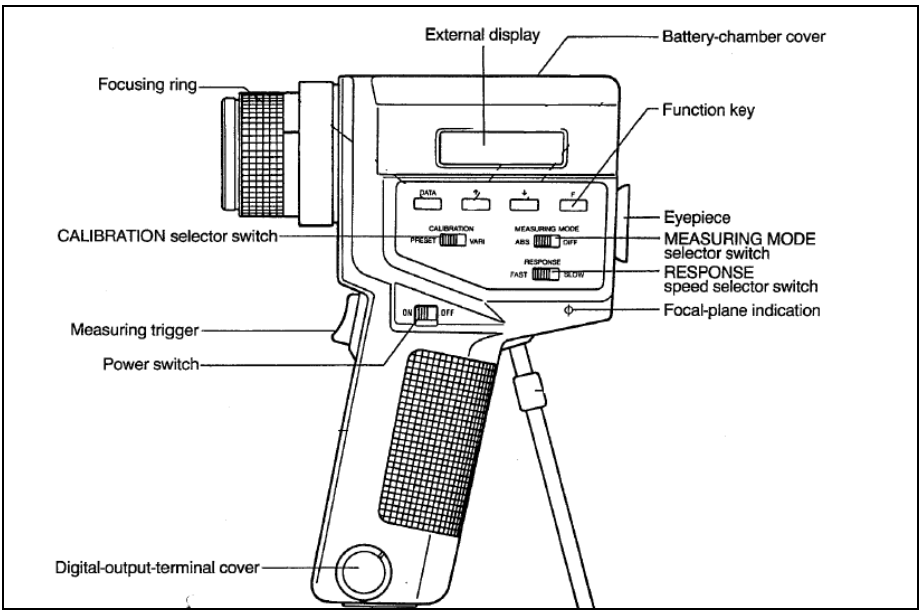

Picture 58 – Stimulus light intensity tab.

3. Set Minolta *RESPONSE* to **FAST**, *MEASURING MODE* to **ABS**.

4. Set luminance unit selector switch to cd/m^2. Selector is located inside battery compartment.

5. Attach Minolta close-up lens no. 35 to device objective lens.

6. Turn on perimeter and install rs-232 to USB converter software drivers if needed.

7. Configure RS-232 port COM number - check rs-232 to USB converter settings.

8. Press *F*-function key and when key is pressed turn on the device with Power switch. This will set Minolta to work in remote mode – '**C**' letter will appear on device external display.

9. Run perimeter application. Select '***Menu' >> 'Advanced Service'***, enter service password –'***16434***'.

10. Select '***Stimulus intensity levels'*** tab >> '***White***' tab. Current stimulus intensity calibration data will be automatically loaded from the perimeter memory.

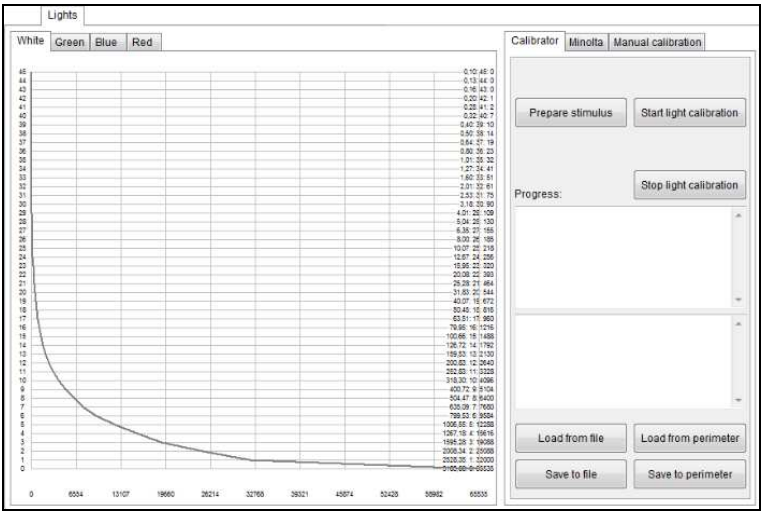

Picture 59 – Stimulus light intensity tab.

11. Press '***Prepare stimulus***' to project stimulus in proper calibration position.

12. Place Minolta CS-100A on the tripod and adjust its position. Make sure that measuring area circle is entirely covered by stimulus. For proper calibration stimulus should be slightly bigger than measuring area ring (see picture 61).

Picture 60 – Minolta Test setup.

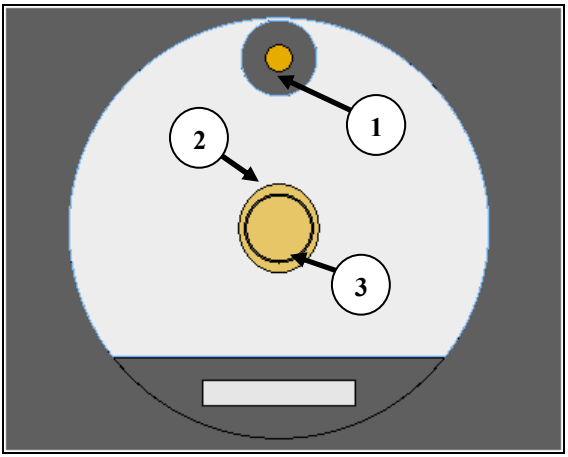

1- Central fixation target
2- Stimulus
3- Measuring area ring

Picture 61 - Minolta internal display view.

13. Adjust Minolta focus with focus ring. Stimulus observed with eyepiece must be sharp. If you can't get sharp image adjust distance between Minolta and Perimeter.

14. Press '***Start light calibration***'. Calibration for each color is fully automatic. When calibration of current color is finished calibration data is automatically stored in device memory.

15. Repeat step 14 for all remaining stimulus colors.

NOTE!

Remember to save calibration data to a file. Please e-mail calibration file to TOMEY. We will store this file in our internal database for future repair purposes.

6.7. Stimulator bowl background intensity calibration check.

WARNING! **You will need dark room or low intensity light room to perform Stimulator bowl background intensity calibration.**

WARNING! **If the room is not dark enough error messages will appear.**

1. Run perimeter application. Select '***Menu' >> 'Advanced Service'***, enter service password –'***16434***'

2. Select '***Background intensity***' tab.

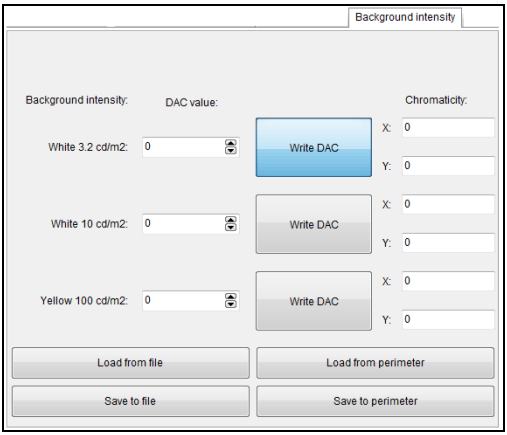

Picture 62 – Background intensity tab.

3. Perform point 3 to 6 from next chapter 6.8.

4. Press '***Load from perimeter***' to load calibration data from device memory.

5. Press '***Write DAC***' button corresponding to background intensity level you want to check.
6. White until message '***Operating***' will disappear. This means that background intensity is set to calibrated level.

7. Measure light intensity in each quadrant inside calibration marks. Make sure that Minolta focus is set correctly. Calibration marks border line should be sharp. Luminosity readings can be slightly different in each quadrant, this difference should not be bigger than 10%.

8. Calculate average intensity value from each quadrant measurement.

9. Average value should be within 10% tolerance to normative value.

Recalibrate unit if needed.

6.8. Stimulator bowl background intensity calibration.

WARNING! **You will need dark room or low intensity light room to perform Stimulator bowl background intensity calibration.**

WARNING! **Attach front cover before you start calibration.**

WARNING! **If the room is not dark enough error messages will appear.**

1. Run perimeter application. Select '***Menu' >> 'Advanced Service'***, enter service password –'***16434***'.

2. Select '***Background intensity***' tab.

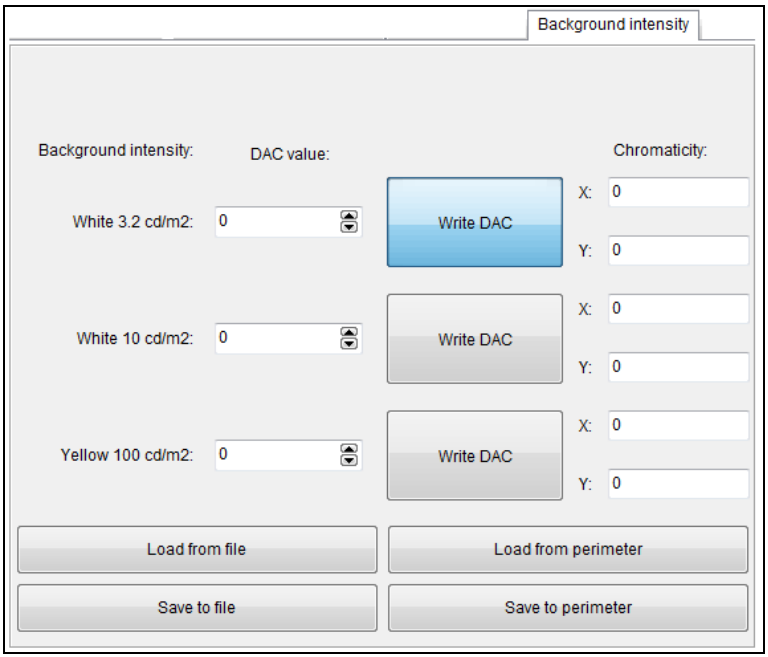

Picture 63 – Background intensity tab.

3. Attach four calibration markers (PN: 53-99136.01) to stimulator bowl. Attach markers in the center of each quadrant.

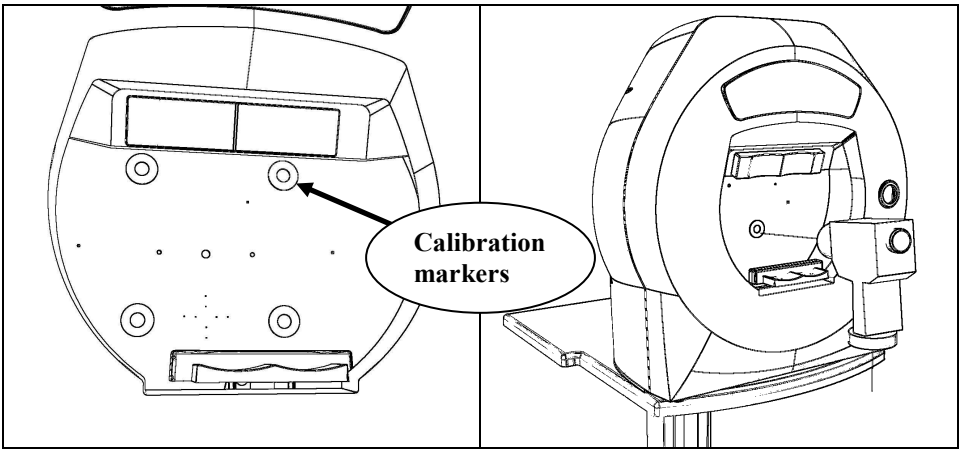

Picture 64 – Background illumination measurement.

4. Set Minolta *RESPONSE* to **FAST**, *MEASURING MODE* to **ABS**.

5. Set luminance unit selector switch to cd/m^2. Selector is located inside battery compartment.

6. Attach Minolta close-up lens no. 35 to device objective lens.

7. Start calibration with 3.2cd/m^2 white background.

8. Press 'Write DAC' button corresponding to the white 3.2cd/m^2 and wait few seconds. When background intensity stabilizes, message '***Operation***' will disappear.

9. Measure light intensity in each quadrant inside calibration marks. Make sure that Minolta focus is set correctly. Calibration marks border line should be sharp. Readings can be slightly different in each quadrant - this difference should not be bigger than 10%.

10. Adjust DAC value and repeat measurement until average Minolta reading reach 3.2cd/m2 +/- 10% (for white 3.2cd/m^2).

11. Enter measured chromaticity x and y values from last measurement into x and y edit fields corresponding to 3.2cd/m2 luminosity.

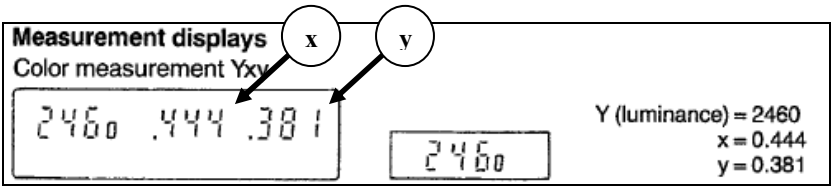

Picture 65 – Minolta external display - chromaticity values.

12. Continue with this same procedure for white (10cd/m$^{2)}$ and yellow (100cd/m^2) background intensity.

15. When all levels are calibrated press '***Save to perimeter***' to store calibration data to device memory.

Background intensity	Background color
100 cd/m^2	Yellow
10 cd/m^2	White
3.2 cd/m^2	White

Table 1 – Background illumination normative values.

NOTE!

Remember to save calibration data to a file. Please e-mail calibration file to TOMEY. We will store this file in our internal database for future repair purposes.

6.9. Internal light sensor position calibration.

1. Remove front housing.

2. Run perimeter application. Select '***Menu' >> 'Advanced Service'***, enter service password –'***16434***'.

3. Select '***Internal light detector'*** tab >> '***Position***' tab.

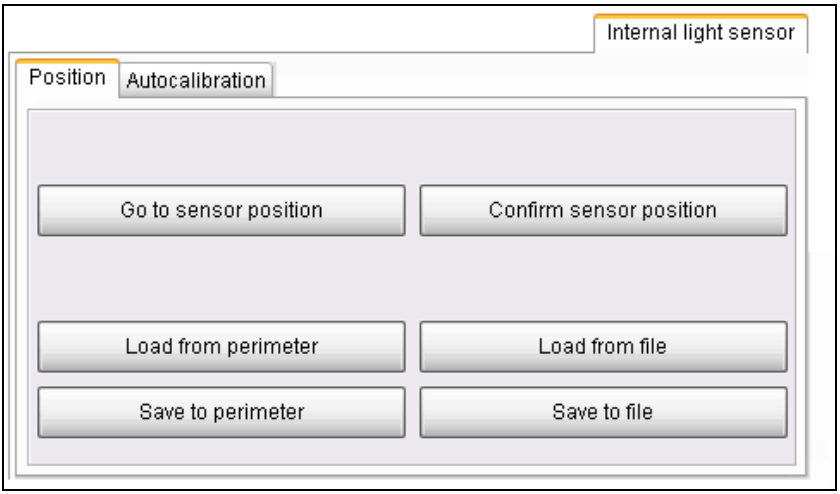

Picture 66 – Internal stimulus intensity sensor.

4. Select **GREEN** stimulus size **V** and **6dB** brightness form service menu common buttons.

5. Press '***Go to sensor position***' to move stimulus to the last calibrated position of internal light sensor. Use stimulus position buttons to move stimulus to the center of internal light detector (see picture 67). Adjust stimulus focus with '***Focus***' buttons.

6. Press '***Confirm sensor position***'.

7. Press '***Save to perimeter***' to store calibration to perimeter memory.

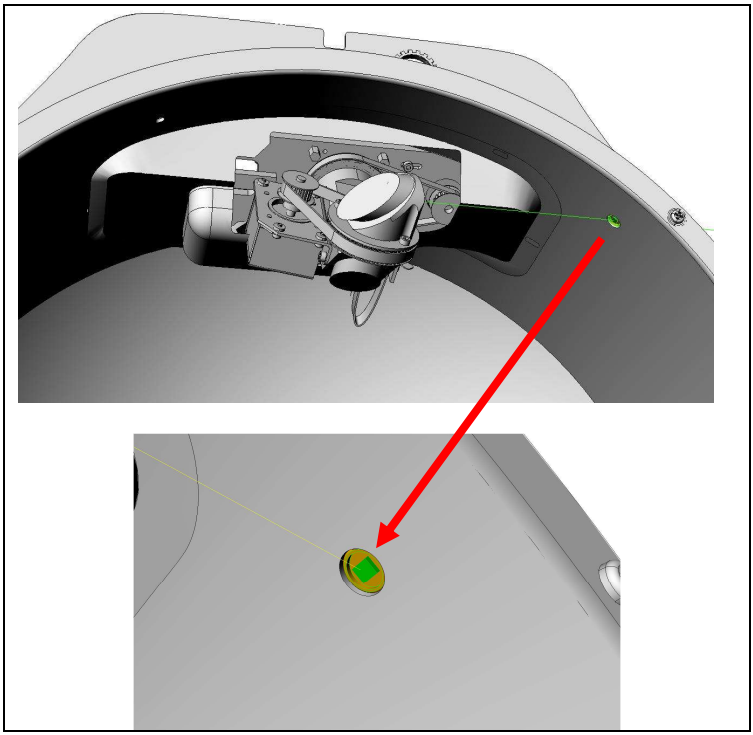

Picture 67 – Internal stimulus intensity sensor.

NOTE!

Remember to save calibration data to a file. Please e-mail calibration file to TOMEY. We will store this file in our internal database for future repair purposes.

6.10. Internal light sensor calibration check.

WARNING! **You will need dark room or low intensity light room to perform stimulus intensity calibration.**

WARNING! **Attach front cover before you start calibration.**

WARNING! **If the room is not dark enough error messages will appear.**

1. Run perimeter application. Select '***Menu' >> 'Advanced Service'***, enter service password –'***16434***'.
2. Select '***Internal Light sensor'*** tab >> '***Auto calibration***' tab.
3. Press '***Go to sensor position***' button to move stimulus to the light detector.
4. Press '***Check***'. Calibration check is fully automatic process.

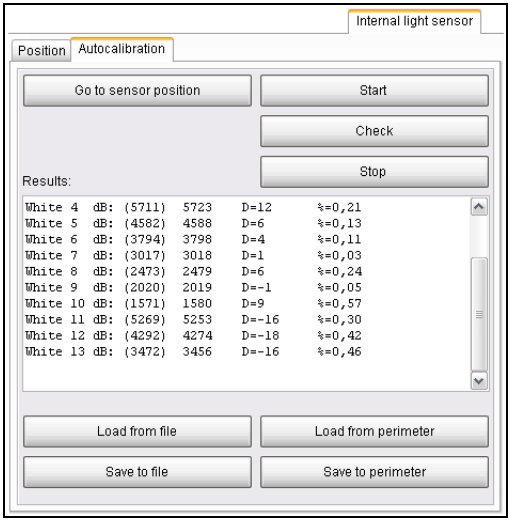

Picture 68 – Internal light sensor auto calibration.

5. Measurement results are displayed in result memo with following order: Stimulus color, intensity - dB value, DAC value (perimeter memory calibration), DAC value - current measurement, DAC difference (current measurement – memory calibration values) , percentage difference.
6. If percentage value exceeds 15%, check light sensor position calibration and stimulus intensity calibration. Recalibrate unit if needed.

6.11. Internal light sensor calibration.

WARNING! **You will need dark room or low intensity light room to perform stimulus intensity calibration.**

WARNING! **Attach front cover before you start calibration.**

WARNING! **If the room is not dark enough error messages will appear.**

1. Run perimeter application. Select '***Menu' >> 'Advanced Service'***, enter service password –'***16434***'.
2. Select '***Internal Light sensor'*** tab >> '***Auto calibration***' tab.
3. Press '***Go to sensor position***' button to move stimulus to the light detector.
4. Press '***Start***'. Calibration is fully automatic process.
5. Press '***Save to perimeter***' to sore new calibration data to perimeter memory.

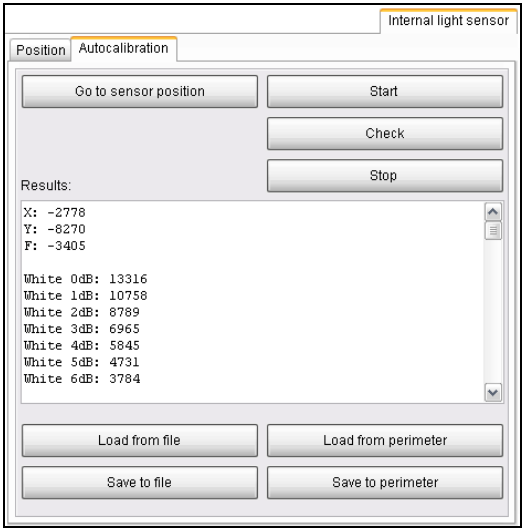

Picture 69 – Internal stimulus auto calibration.

NOTE! **Remember to save calibration data to a file. Please e-mail calibration file to TOMEY. We will store this file in our internal database for future repair purposes.**

6.12. CCD camera module position calibration.

1. Remove front housing.
2. Attach camera position calibration tool ‘1’ - (PN: 53-99110.01) to stimulator bowl.

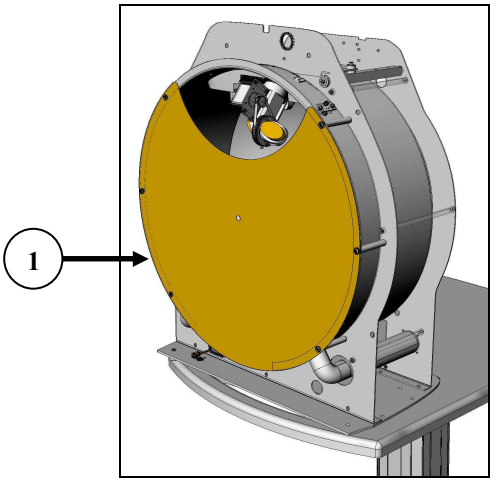

Picture 70 - Camera calibration.

3. Run perimeter application and start any exam to display camera window.
4. Adjust camera position using four Allen screws - see picture 71. Make sure that there is a distance 0.2mm to 0.5mm between stimulator bowl and central fixation target (green arrow on picture 71).

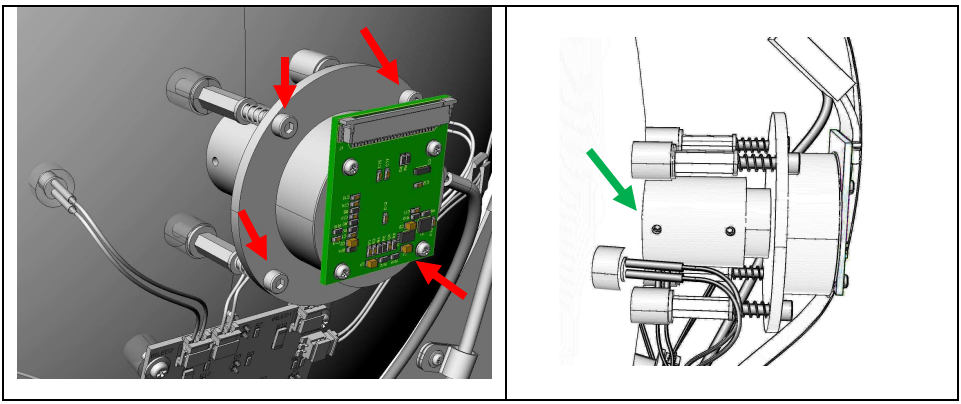

Picture 71 - Adjusting screws.

5. Calibration pattern central hole should be visible in the center of camera view window. .

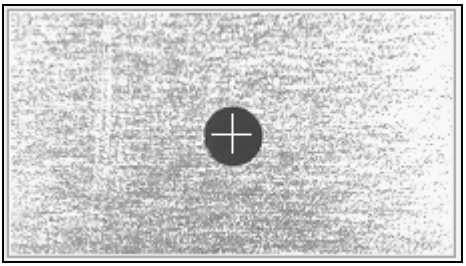

Picture 72 – Camera window view.

6. After calibration apply screw locking solution to heads of adjusting screws.

WARNING! **After CCD camera calibration, lens holder position/adjustment procedure should be checked.**

6.13. Lens holder lock position - check/adjustment.

1. Insert calibration dummy lens ‘1’ (PN: 53-99112.01) into patient lens holder.

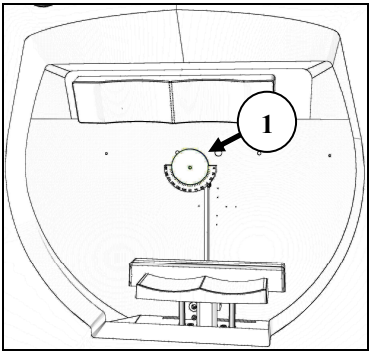

Picture 73 – Calibration lens.

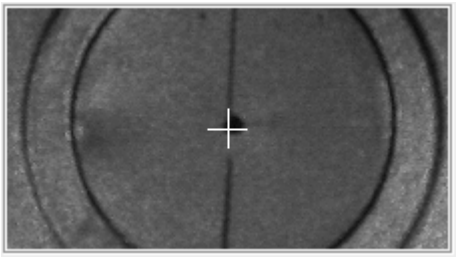

Picture 74 – Dummy lens (camera view).

2. Run perimeter application and start any exam to display camera window.

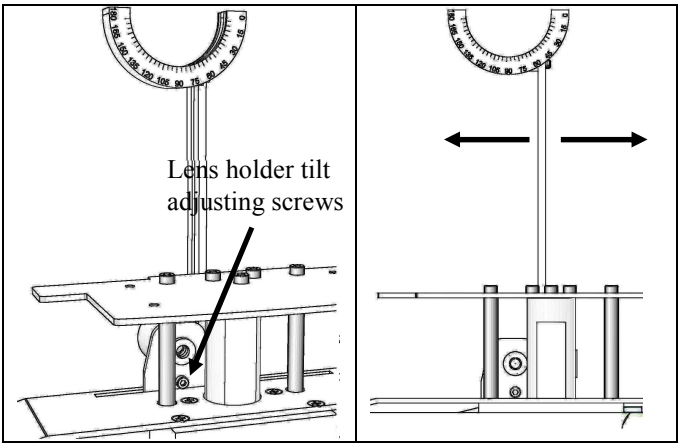

Picture 75 – Lens holder tilt adjustment.

3. Lens holder is equipped with locking mechanism for easy positioning. This mechanism is keeping lens holder in vertical central position when it is being used during examination. Loose adjusting screw and move the screw left or right to adjust locking position. Dummy lens central hole should be visible in the cross located in the center of camera view.

4. Lock the screw when adjust is done. Move lens holder right and back again to see if lens holder will stop in the center of camera view window.

7. SOFTWARE UPGRADE.

7.1. PC software upgrade.

WARNING! **To perform software upgrade you will need USB pen drive with software upgrade file.**

1. Turn on perimeter.
2. Close Perimeter application.
3. Insert USB pen drive into USB connector of AP-3000.
4. Go to 'My computer' and open USB drive.
5. Execute software upgrade file.

Software upgrade is fully automatic process. At the end message will appear '***Software upgrade successful***'.

7.2. Perimeter firmware upgrade.

WARNING! **To perform firmware upgrade you will need USB pen drive with new firmware files.**

1. Turn on perimeter.
2. Run perimeter application. Select '***Menu' >> 'Advanced Service'***, enter service password –'***16434***'.
3. Select '***ID***' tab.
4. Select '***Upgrade form a file***', enter service password – '***11234***'.
5. Select file '**file_name.uap**' with software upgrade. Program will check upgrade file and display information of the new firmware revision that will be installed. Press '***Accept***' to continue with software upgrade or '***Cancel***' to exit without change.
6. When the upgrade is done message '***Software upgrade success***' will appear. Please restart the unit after this message.

New software revision will be displayed in the software/hardware information box.

WARNING! **Perform device check after internal software upgrade.**

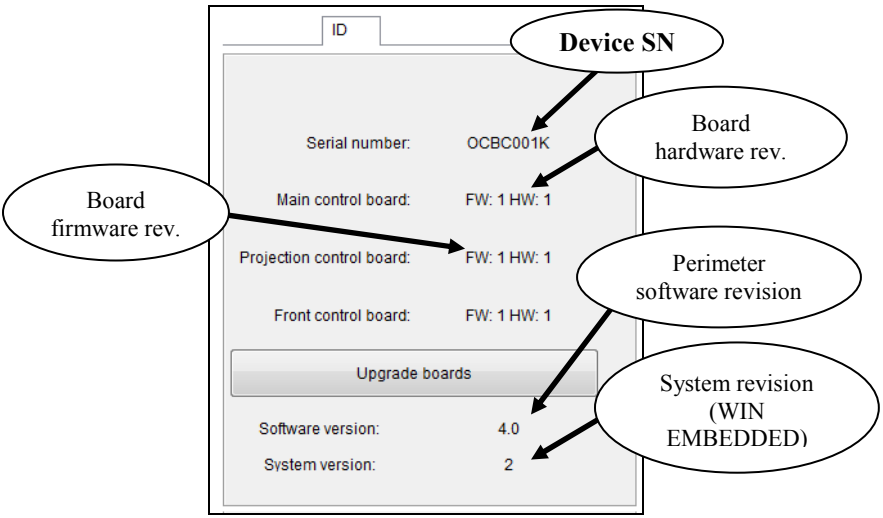

Picture 76 – Internal software upgrade tab.

7.3. System reinstallation (WIN embedded).

NOTE! **To perform system reinstallation you will need system recovery pen drive.**

1. Turn on the device and enter BIOS settings by pressing DEL button during PC board startup.

2. Insert system recovery pen drive into perimeter USB port.

3. Select '***Advanced BIOS Features***' and set following parameters.

First Boot Device	[USB-ZIP]

4. Select '***Save and Exit Setup***'.

System will reboot from recovery pan drive. Following message will appear.

```
Please make your selection:
1. System rebuild
        -Copy perimeter software and database files to pen
         drive.
        -Format hard drive partitions.
        -Copy all system files from recovery pen drive to
         hard drive partition C:
        -Copy perimeter software and database files to C:
2. Rescue database file
        -Copy database file and perimeter software to
         recovery pen drive (if possible).
3. Recover database file
        -Copy database file and perimeter software from
         recovery pen drive to perimeter (if possible).
4. Reboot
        -Restart perimeter
```

5. Select one of available options.

6. Go BIOS and from '***Advanced BIOS Features***' set following parameters.

First Boot Device	[Hard Disk]

7. Select '***Save and Exit Setup***'. System will restart.

8. FACTORY BIOS SETTINGS.

To set BIOS settings to factory defaults please follow this chapter.

1. Turn on the device and enter BIOS settings by pressing DEL button.

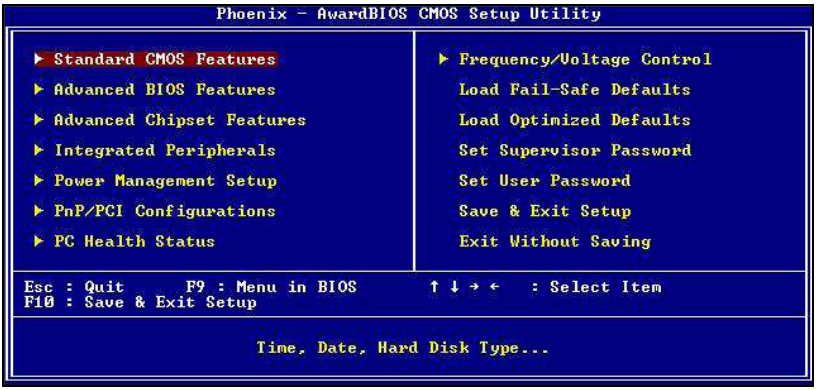

Picture 77 – BIOS settings.

2. Select '***Load Optimized Defaults***' then press '***y***' and '***enter***' to reset BIOS settings.

3. Select '***Standard CMOS Features***' and set following parameters.

Halt on	[No Errors]

4. Select '***Advanced BIOS Features***' and set following parameters.

First Boot Device	[Hard Disk]
Second Boot Device	[Disabled]
Third Boot Device	[Disabled]
Boot Other Device	[Disabled]

5. Select '***Save and Exit Setup***'.

9. PERIMETER SOFTWARE INSTALATION.

To install perimeter software select and execute "***Install_AP.EXE***" from the installation disk. The following screen should appear:

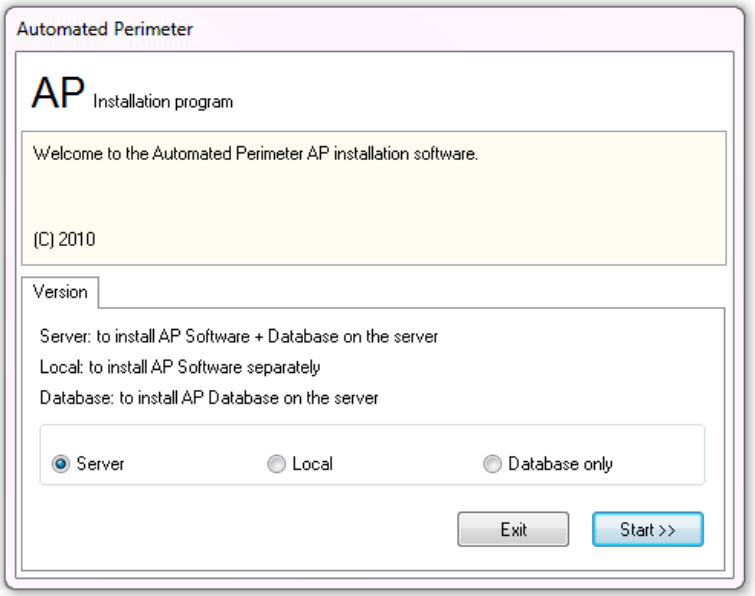

Picture 78. Software installation.

Depending on local requirements perimeter software can be installed as one of four different configurations.

- Network installation
- Single small network. Perimeter PC acts as database server.
- Single perimeter workstation – no network.
- Result viewer workstation – no network.

9.1. Network installation.

Local network with server and many workstations connected to it. Perimeter or perimeters computers are connected as local workstations.

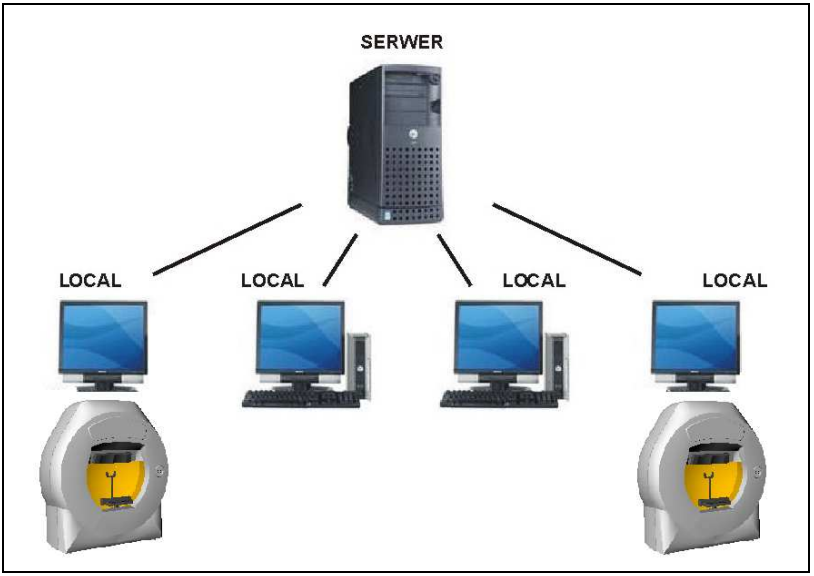

Picture 79. Network configuration.

In this configuration Firebird and perimeter software with '***Database only***' option must be installed on the server computer.
Perimeter software is installed on each perimeter PC with option '***Local***'. In this network configuration do not install Firebird server on perimeter PC.

During '***Local***' installation server computer name must be entered. Press '***Browse***' to find server PC in the local network.

9.2. Single small network.

Small local network where perimeter PC is acting as database server.

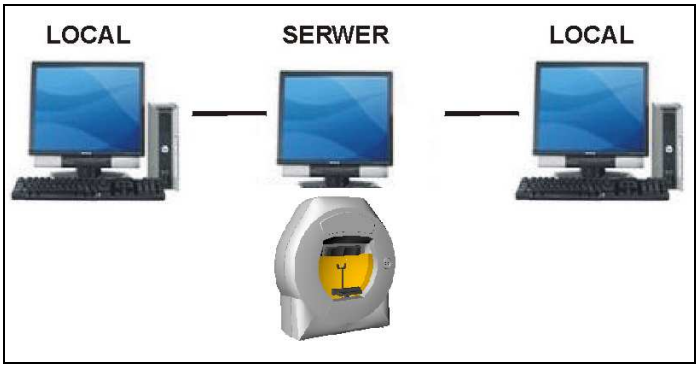

Picture 80. Small network configuration.

In this situation Firebird and perimeter software with option '***Server***' must be installed on the perimeter computer. If other network computers are acting as viewing stations perimeter software must be installed with option '***Local***'. Do not install Firebird on other local computers.

During '***Local***' installation server computer name must be entered. Press '***Browse***' to find server PC in the local network.

9.3. Single workstation.

Single workstation with perimeter connected to it.

Picture 81. Stand alone station.

In this case Firebird and perimeter software with '***Server***' option must be installed on perimeter PC.

9.4. Result viewer station.

Single workstation acting as result viewer. Not connected to any network.

Picture 82. Result viewing station.

In this case Firebird and perimeter software with '***Server***' option must be installed on the viewing station PC.

ANNEX A

ELECRICAL SCHEMATIC DIAGRAM

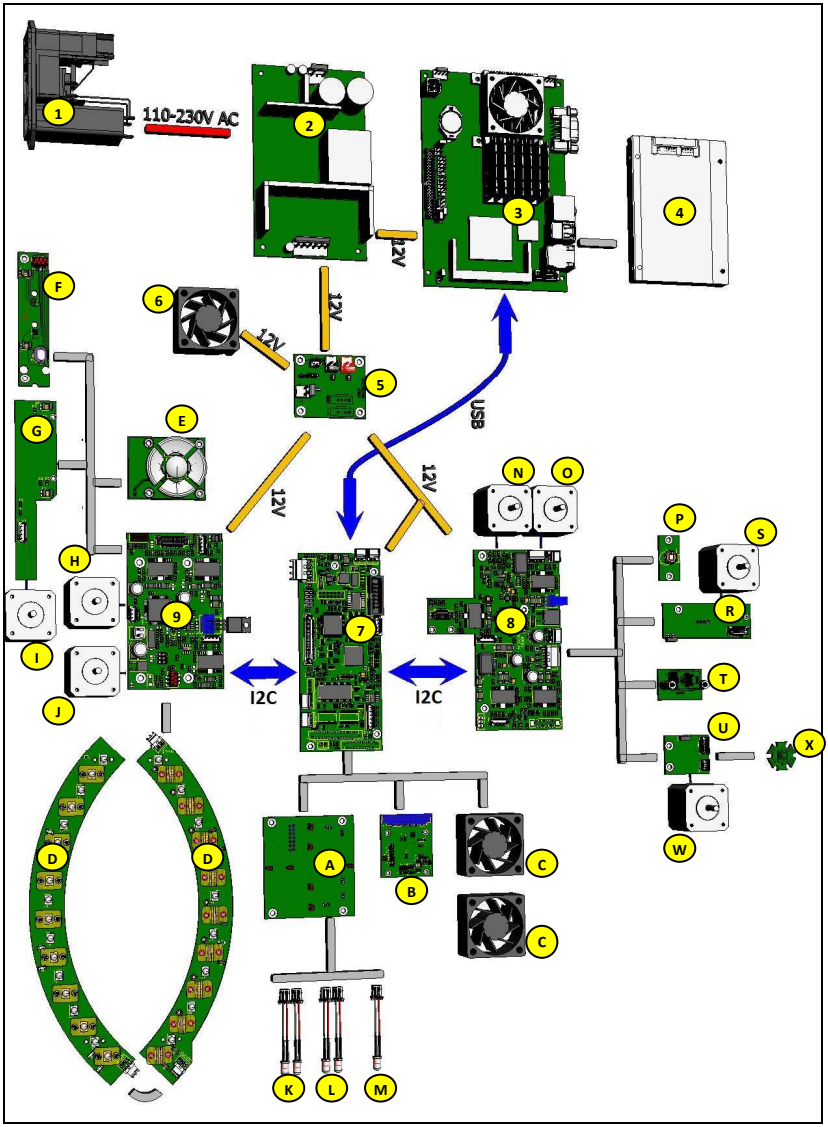

No	*Spare part*
1	Power inlet module
2	Power supply
3.	PC board
4.	Hard Drive
5.	Power junction board
6.	PC fan
7.	Main control board
8.	Projection module control board
9.	Front housing control board
A.	Fovea board
B.	CCD camera board
C.	Stimulator bowl fans
D.	LED boards - bowl illumination
E.	NAVI-keyboard
F.	Forehead support board
G.	Chin rest board
H.	Chin rest motor Left/Right
I.	Chin rest motor Up/Down
J.	Forehead motor Left/Right
K.	IR LEDs
L.	Wide fixation LEDs
M.	Central fixation LED
N.	Stimulus position motor Left/Right
O.	Stimulus focus motor
P.	Stimulus intensity sensor
R.	Stimulus position Up/Down motor board
S.	Stimulus position motor Up/Down
T.	Patient switch control board
U.	LED connector board
W.	Stimulus disk motor
X.	Stimulus LED

ANNEX B

COMPONENT LIST

No	*Spare part*	*Code*
1	Patient response button	53-01018.00
2	Eye cover	38-19093.01
3	Dust cover	53-20001.01
4	Hygienic set (chin rest + forehead support - 10 pieces each)	53-19102.01
5	Packaging box – replacement set	53-06104.01

ANNEX C

SERVICE TOOLS

No	*Spare part*	*Code*
1	Allen hex key size 4,35cm long	53-99122.01
2	Allen hex key size 3	53-99124.01
3	Calibration dummy lens.	53-99112.01
4	Minolta CS-100A	01-40090.01
5	Tripod (Minolta CS-100A compatible)	53-99134.01
6	Minolta close-up lens no: 135	01-40099.01
7	Minolta RS-232 communication cable	01-40094.01
8	RS232 to USB converter	08-00269
9	Projection module spacer	53-99118.01
10	Stimulator bowl calibration pattern	53-99130.01
11	Camera position calibration tool	53-99110.01
12	Stimulus disk home calibration pattern	53-99132.01
13	Stimulus disk spacer	53-99116.01
14	Background intensity calibration marks	53-99136.01
15	System recovery pen drive	53-80041.01

ANNEX D

CALIBRATION AND ADJUSTMENT FLOW TABLE

Stimulus disk home position calibration

▼ Stimulus Intensity check/calibration

▼ Internal light sensor position check/calibration

▼ Stimulator bowl geometry check/calibration

▼ Internal light sensor check/calibration

▼ Internal light sensor check/calibration

Part replacement or procedure performed	Required calibration
Stimulator bowl replacement.	- Stimulator bowl geometry calibration. - Position calibration of internal light sensor. - Internal light sensor calibration. - CCD camera module position calibration
Internal light sensor replacement.	- Internal light sensor calibration.
CCD camera module replacement/removal.	- CCD camera module position calibration.
Lens holder or chin rest module replacement/removal.	- Lens holder position check/adjustment.
Projection module removal.	- Stimulator bowl geometry calibration. - Stimulus intensity check (calibration if needed). - Position calibration of internal light sensor check, calibration if needed. - Calibration of internal light sensor.
Projection module replacement.	- Main control board calibration data upload (new projection module data - stimulus intensity calibration and stimulus disk home position). - Stimulator bowl geometry check/calibration. - Stimulus intensity check (calibration if needed). - Position check/calibration of internal light sensor. - Calibration/check of internal light sensor.

Part replacement or procedure performed	Required calibration
Projection module control board replacement (53-01003.xx).	- Stimulator bowl geometry check/calibration if needed. - Position calibration of internal light sensor. - Calibration of internal light sensor. - Stimulus intensity check (calibration if needed).
Stimulus motor with LED module (53-71542.xx).	- Stimulus disk home position calibration. - Stimulator bowl geometry check/calibration if needed. - Stimulus intensity check (calibration if needed). - Internal light sensor calibration check – calibration if needed (position and light)
LED lens module replacement (53-71540.xx).	- Stimulus disk home position calibration. - Stimulator bowl geometry check/calibration if needed. - Stimulus intensity check (calibration if needed). - Internal light sensor calibration check – calibration if needed (position and light)
Stimulus disk replacement/removal (53-71481.xx).	- Stimulus disk home position calibration. - Stimulator bowl geometry check/calibration if needed. - Stimulus intensity check (calibration if needed). - Internal light sensor calibration check – calibration if needed (position and light)
LED connector board replacement/removal (53-07197.xx)	- Stimulus disk home position calibration. - Stimulator bowl geometry check/calibration if needed. - Stimulus intensity check (calibration if needed). - Internal light sensor calibration check – calibration if needed (position and light).
Forehead support board (53-03526.xx)	- Calibration/check of stimulator bowl illumination level.
Front housing control board (53-43245.xx)	- Calibration/check of stimulator bowl illumination level.
Forehead rest module or forehead support board.	- Calibration/check of stimulator bowl illumination level.

xx – part revision number.

ANNEX E

PRODUCT CHANGE NOTES:

Current device hardware revision 1.0.